EINDECKYODO

AIR DIFFUSERS

KYODO®

CONTENTS

3	Company Overview	
4	Ball Jet Diffuser	Model: BJ
6	Turbo Nozzle	Model: NT & NP
8	Turbo Nozzle	Model: NT-C
10	Spot Louvre/Punkah Louvre	Model: PK
13	Drum Jet Diffuser	Model: DJ
15	Round Ceiling Diffuser	Model: C-2
17	Round Ceiling Diffuser	Model: C-3
19	Round Ceiling Diffuser	Model: PC
21	Round Ceiling Diffuser	Model: PC-2
23	T-type Ceiling Diffuser	Model: T-4A
27	Perforated Ceiling Diffuser	Model: TCSX
30	Ceiling Diffuser (Round Plaque)	Model: TR
32	Ceiling Diffuser (Square Plaque)	Model: TS
34	Swirl Diffuser	Model: SW-2
36	Variable Swirl Diffuser	Model: SW-V
38	Linear Diffuser	Model: IT-K
40	Fluorescent Light Troffer Diffuser	Model: SALT
44	Laminar Flow Clean Room/Zone Diffuser	

IMPORTANT NOTICE

Eindec Group reserves the right to make changes without written notice. The actual product might differ from pictures shown. Drawings are not meant to show exact details of every aspect of the product.

COMPANY OVERVIEW

Eindec Group is the region's leading manufacturer of ACMV products, Air Purification systems, Cleanroom equipment and Fire-Smoke Marine Dampers.

Established in 1984 with more than three decades at the forefront of manufacturing ACMV products and working closely with infrastructure business partners across the region, Eindec is experienced in design, customisation, manufacturing and distribution of ACMV products, air purification systems, cleanroom equipment and fire-smoke marine dampers.

Headquartered in Singapore, with our manufacturing plant located in Kulai, Johor Malaysia, and research and development centres in both Singapore and China, Eindec is able to offer integrated solutions from product development to complete assembled products for commercial, industrial and residential infrastructure projects. Armed with an in-house team of engineers, we provide a full spectrum of project based packages from design, supply, installation, testing and commissioning.

Eindec was listed in 2016 on the Catalist Board of the Singapore Exchange Securities Trading Limited.

BALL JET DIFFUSER

FEATURES

- KYODO BJ air jet diffuser provides architecturally preferred excellent appearance for large open areas such as concert hall, airport, theatre, museum & etc.
- Its nozzle type outlet is most suitable for spot cooling or heating, because its direction of air can be adjusted easily to suit one's requirement.
- The maximum up or down adjustment angle of the outlet is ±30° in any direction.
- Low noise level and low pressure drop.
- Constructed of aluminium.

FINISH

Standard finish in baked white enamel.
Other colours are available on request.

MODEL: BJ

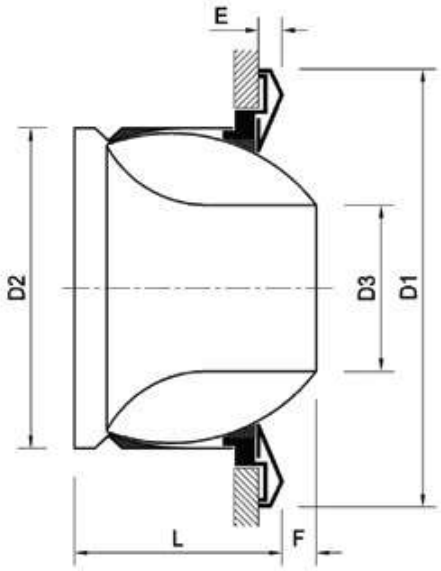

DIMENSIONS

Size	Dia mm	D1	D2	D3	E	F	L	Opening Size
No. 6.5	**Φ 160**	198	158	94	16	10	106	Φ 168
No. 8	**Φ 200**	260	198	104	16	20	130	Φ 218
No. 10	**Φ 250**	304	248	134	16	23	154	Φ 263
No. 12.5	**Φ 315**	386	314	182	23	28	190	Φ 330
No. 16	**Φ 400**	488	398	230	24	40	230	Φ 415
No. 20	**Φ 500**	596	498	286	28	60	290	Φ 520

KYODO reserves the right to make changes without written notice. The actual product might differ from pictures shown. Drawings are not meant to show exact details of every aspects of the product.

TECHNICAL PERFORMANCE DATA
MODEL: BJ

Size	Nozzle Velocity (m/s)	3	5	7	10	13	15	17	20
No. 6.5 Φ160	Air Volume (CMH)	75	125	175	250	325	375	425	500
	Throw (m)	4.0	6.8	9.5	13.4	17.4	20.0	22.1	25.2
	S.P. (Pa)	6	11	14	20	28	32	39	48
	NC	10	12	14	21	29	33	37	41
No. 8 Φ200	Air Volume (CMH)	95	155	215	310	400	460	520	615
	Throw (m)	4.6	7.8	10.5	15.1	19.5	22.5	25.4	30.1
	S.P. (Pa)	5	10	12	16	23	29	33	42
	NC	10	12	14	23	30	35	39	43
No. 10 Φ250	Air Volume (CMH)	155	255	360	510	660	765	865	1015
	Throw (m)	5.8	9.7	13.5	19.1	24.8	28.8	32.7	36.5
	S.P. (Pa)	5	9	11	17	24	28	33	42
	NC	11	14	19	25	33	37	40	45
No. 12.5 Φ315	Air Volume (CMH)	285	470	660	940	1220	1405	1595	1875
	Throw (m)	8.2	12.0	16.9	24.2	31.4	36.2	41.0	45.5
	S.P. (Pa)	5	8	12	20	27	33	39	48
	NC	12	20	26	35	41	45	49	54
No. 16 Φ400	Air Volume (CMH)	450	750	1050	1500	1945	2245	2545	2990
	Throw (m)	9.5	14.3	22.2	32.0	40.5	46.0	50.0	56.5
	S.P. (Pa)	4	7	11	18	26	30	38	46
	NC	14	24	31	39	47	52	54	56
No. 20 Φ500	Air Volume (CMH)	695	1160	1620	2315	3010	3470	3935	4630
	Throw (m)	10.0	16.6	23.2	33.2	41.0	48.0	52.0	58.0
	S.P. (Pa)	4	7	11	17	25	30	39	45
	NC	19	28	34	43	50	54	58	60

- Result of performance is tested under NATA, in accordance with ASHRAE STANDARD 70-2006.
- All values are tested at 0^0 angle of air discharge.
- SP - Static Pressure drops are in Pascals.
- NC - Noise Criterion based upon room absorption of 10 dB.
- Throw - Throw at 0.5m/s terminal velocity in metres.

KYODO reserves the right to make changes without written notice. The actual product might differ from pictures shown. Drawings are not meant to show exact details of every aspects of the product.

TURBO NOZZLE

Turbo Nozzle is a high quality and high anti-corrosion products which is fabricated using aluminium and stainless steel.

It is an ideal product for bigger air volume and longer distance air flow. You can choose the number of nozzle according to its size.

FEATURES

- Direction of nozzle can be easily adjusted to suit one's requirement
- NT size 4 has only 1 no of adjustable nozzle with SUS 304 ring
- NT size 6~16 have 2 nos of adjustable nozzle with SUS 304 ring
- NT size 20 & 24 have 3 nos of adjustable nozzle with SUS 304 ring

FINISHING

Standard finishing colour is natural anodizing. Other colours in baked enamel are available on request.

MODEL: NT & NP

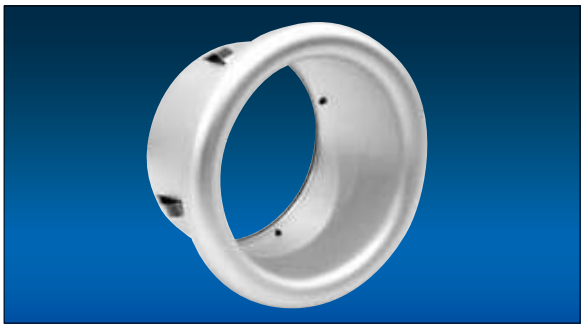

NT

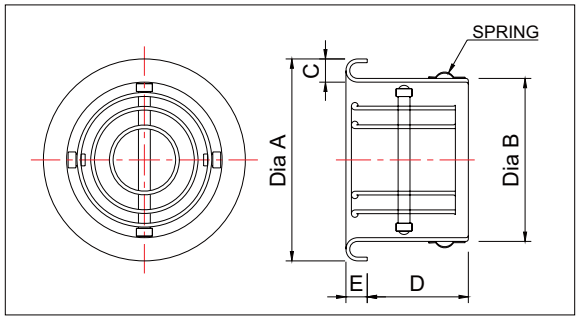

NP

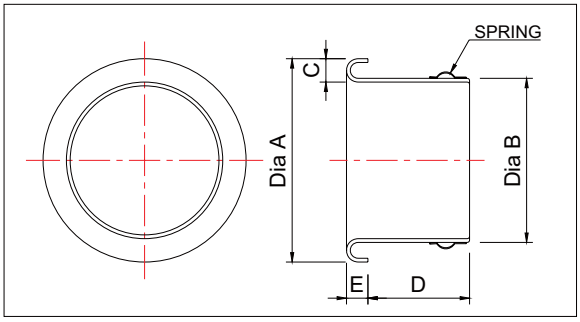

DIMENSIONS

Model	A	B	C	D	E	Duct Size
NT 4	121	92	18	51	13	Ø100 (4")
NT 6	183	141	22	85	17	Ø150 (6")
NT 8	239	191	26	108	19	Ø200 (8")
NT 10	302	241	32	129	24	Ø250 (10")
NT 12	364	291	38	124	29	Ø300 (12")
NT 14	422	341	42	121	32	Ø350 (14")
NT 16	477	391	45	119	34	Ø400 (16")
NT 20	596	498	51	165	38	Ø508 (20")
NT 24	698	599	51	165	38	Ø609 (24")

DIMENSIONS

Model	A	B	C	D	E	Duct Size
NP 4	121	92	18	51	13	Ø100 (4")
NP 6	183	141	22	85	17	Ø150 (6")
NP 8	239	191	26	108	19	Ø200 (8")
NP 10	302	241	32	129	24	Ø250 (10")
NP 12	364	291	38	124	29	Ø300 (12")
NP 14	422	341	42	121	32	Ø350 (14")
NP 16	477	391	45	119	34	Ø400 (16")
NP 20	596	498	51	165	38	Ø508 (20")
NP 24	698	599	51	165	38	Ø609 (24")

KYODO reserves the right to make changes without written notice. The actual product might differ from pictures shown. Drawings are not meant to show exact details of every aspects of the product.

NT Turbo Nozzle

Size																				
	Neck Velocity		1.52		2.03		2.54		3.05		3.56		4.06		5.08		6.10		7.11	
	Velocity Pressure Loss (mmAq)		0.15		0.25		0.41		0.56		0.79		1.02		1.57		2.29		3.10	
	Angle		0	22.5	0	22.5	0	22.5	0	22.5	0	22.5	0	22.5	0	22.5	0	22.5	0	22.5
4"	Neck Area (sq.m.) 0.0081	Air Volume (CMH)	51		68		85		102		119		136		153		187		221	
		Static Press Loss (mmAq)	-	-	-	-	0.76	1.52	1.22	1.65	1.65	2.54	2.16	3.05	2.16	3.05	3.35	5.59	5.72	7.62
		NC Rating (dB)	-	-	-	-	-	-	15	19	20	24	22	28	30	31	32	36	37	38
		Distance (m)	2.7	2.4	3.0	2.4	3.4	2.7	3.7	3.0	4.0	3.4	4.3	3.7	4.3	4.0	4.6	4.3	4.9	4.6
6"	Neck Area (sq.m.) 0.0182	Air Volume (CMH)	102		136		170		204		238		272		340		408		476	
		Static Press Loss (mmAq)	-	0.51	-	0.76	0.51	1.27	0.76	1.27	1.27	1.57	1.14	1.91	1.88	3.25	3.05	5.08	4.32	7.37
		NC Rating (dB)	-	-	-	-	-	-	-	-	-	17	15	20	22	28	29	34	34	41
		Distance (m)	3.0	2.4	3.7	3.0	4.6	3.7	7.9	4.6	4.9	4.0	5.8	5.5	6.4	6.1	7.3	6.7	7.9	7.0
8"	Neck Area (sq.m.) 0.0324	Air Volume (CMH)	187		238		306		357		425		476		595		714		833	
		Static Press Loss (mmAq)	-	-	0.25	0.51	0.51	0.76	0.61	1.02	1.02	1.52	1.40	2.54	2.29	3.05	3.81	5.33	5.59	7.62
		NC Rating (dB)	-	-	-	18	-	18	15	18	20	21	22	26	25	32	27	33	35	40
		Distance (m)	4.3	3.7	5.5	5.2	6.1	5.5	6.7	6.1	7.3	6.4	7.9	7	8.5	7.6	9.1	8.2	9.8	8.5
10"	Neck Area (sq.m.) 0.0506	Air Volume (CMH)	289		374		476		561		663		748		934		1121		1308	
		Static Press Loss (mmAq)	-	-	-	0.51	0.25	0.76	0.46	1.02	0.76	1.27	1.02	1.57	1.37	2.31	1.93	3.30	2.54	6.10
		NC Rating (dB)	-	-	-	-	-	15	-	20	20	22	15	16	24	16	25	32	34	38
		Distance (m)	6.4	5.5	7.3	6.1	7.9	6.4	8.5	7.3	9.1	8.2	9.8	8.5	10.4	9.4	11.6	10.1	12.2	10.7
12"	Neck Area (sq.m.) 0.0729	Air Volume (CMH)	408		544		680		816		934		1070		1342		1614		1869	
		Static Press Loss (mmAq)	-	-	-	0.25	-	0.64	0.89	1.02	1.02	1.27	1.27	2.54	1.27	2.29	1.52	2.54	2.54	5.08
		NC Rating (dB)	-	-	-	-	-	-	-	-	-	20	18	22	22	32	31	38	35	42
		Distance (m)	7.6	6.4	8.2	7.0	8.5	7.9	9.4	8.5	10.4	9.4	10.7	9.8	12.5	11.6	12.8	12.2	13.1	12.5
14"	Neck Area (sq.m.) 0.0993	Air Volume (CMH)	561		731		917		1104		1274		1461		1818		2192		2549	
		Static Press Loss (mmAq)	-	-	-	-	-	0.66	0.76	1.04	0.71	1.02	0.76	1.27	1.02	1.52	1.27	2.54	3.61	6.35
		NC Rating (dB)	-	-	-	-	-	-	-	15	15	21	16	29	24	30	29	34	36	40
		Distance (m)	8.2	7.0	9.1	7.9	10.1	9.4	11.3	10.1	12.2	11.0	12.5	11.9	13.1	12.5	15.8	14.0	18.0	15.2
16"	Neck Area (sq.m.) 0.1297	Air Volume (CMH)	714		951		1189		1427		1665		1903		2379		2854		3330	
		Static Press Loss (mmAq)	-	-	-	-	-	0.76	0.56	0.97	0.84	0.56	1.02	0.76	1.27	1.04	1.52	1.78	1.78	2.16
		NC Rating (dB)	-	-	-	-	-	-	-	-	-	15	-	17	23	26	30	33	35	38
		Distance (m)	9.1	8.2	10.4	9.8	11.6	11.0	12.5	11.9	13.1	12.5	14.0	13.1	16.5	14.6	18.9	16.5	21.3	18.3
20"	Neck Area (sq.m.) 0.2027	Air Volume (CMH)	1121		1495		1869		2226		2600		2973		3721		4451		5199	
		Static Press Loss (mmAq)	-	-	-	-	-	0.76	0.53	0.76	0.81	1.02	1.07	1.27	1.52	1.78	2.41	2.79	3.05	3.56
		NC Rating (dB)	-	-	-	-	-	-	-	15	-	15	17	25	26	32	30	35	36	42
		Distance (m)	12.2	11.3	13.7	12.5	14.0	13.7	16.2	14.6	17.4	16.2	19.2	17.1	21.6	19.2	24.4	24.1	28.8	21.9
24"	Neck Area (sq.m.) 0.2919	Air Volume (CMH)	1614		2141		2684		3211		3738		4282		5352		6422		7476	
		Static Press Loss (mmAq)	-	-	-	-	-	0.76	0.51	0.51	0.64	1.02	1.02	1.27	1.40	1.78	2.16	2.54	3.05	3.30
		NC Rating (dB)	-	-	-	-	-	-	-	15	15	22	19	27	24	33	32	37	38	44
		Distance (m)	14.0	13.4	15.8	14.6	17.4	16.2	18.9	17.4	20.4	18.9	22.3	20.4	25.3	23.2	28.3	25.8	31.7	29.0

NP Turbo Nozzle

Size								
	Neck Velocity (m/s)		1.27	2.54	3.81	5.1	6.35	7.62
	Velocity Pressure Loss (mmAq)		0.102	0.406	0.889	1.575	2.464	3.556
	Total Pressure (mmAq)		0.584	1.473	2.921	4.241	6.527	8.458
4	Neck Area (sq.m.) 0.058	Air Volume (CMH)	34	68	85	119	136	170
		NC Rating (dB)	-	-	-	-	15	16
		Distance (m)	2.8	3.4	4.6	5.2	5.5	6.1
6	Neck Area (sq.m.) 0.0138	Air Volume (CMH)	68	136	187	255	306	374
		NC Rating (dB)	-	-	-	-	15	16
		Distance (m)	3.7	4.9	6.1	6.7	7.3	8.2
8	Neck Area (sq.m.) 0.0251	Air Volume (CMH)	119	238	357	459	578	697
		NC Rating (dB)	-	-	-	-	15	16
		Distance (m)	3.7	5.8	7	8	8.8	10
10	Neck Area (sq.m.) 0.0399	Air Volume (CMH)	187	374	561	731	918	1105
		NC Rating (dB)	-	-	-	-	15	16
		Distance (m)	4	6.4	7.6	8.8	10	11
12	Neck Area (sq.m.) 0.0587	Air Volume (CMH)	272	544	816	1088	1343	1615
		NC Rating (dB)	-	-	-	-	15	16
		Distance (m)	4.6	7	8.5	9.5	10.7	12.2
14	Neck Area (sq.m.) 0.0799	Air Volume (CMH)	374	731	1105	1462	1836	2193
		NC Rating (dB)	-	-	-	-	15	16
		Distance (m)	5	7	8.9	10	11.6	13.8
16	Neck Area (sq.m.) 0.1074	Air Volume (CMH)	493	986	1479	1972	2465	2958
		NC Rating (dB)	-	-	-	-	15	16
		Distance (m)	5	7	8.5	10.4	11.3	12.8
20	Neck Area (sq.m.) 0.1747	Air Volume (CMH)	799	1598	2397	3196	3995	4794
		NC Rating (dB)	-	-	-	-	15	16
		Distance (m)	5.2	7	8.2	10	11	12.8
24	Neck Area (sq.m.) 0.2508	Air Volume (CMH)	1156	2295	3451	4590	5746	6881
		NC Rating (dB)	-	-	-	-	15	16
		Distance (m)	5.2	6.7	8.6	10	11	13.4

Air Velocity is at 0.254m/s.
- Underline is below 0.254m/s.
- Underline is below 15dB

KYODO reserves the right to make changes without written notice. The actual product might differ from pictures shown. Drawings are not meant to show exact details of every aspects of the product.

TURBO NOZZLE

Turbo Nozzle is a high quality and high anti-corrosion products which is fabricated using aluminium.

It is an ideal product for bigger air volume and longer distance air flow.

FEATURES

- Direction of nozzle can be easily adjusted to suit one's requirement.
- Suitable for ceiling or wall installation.

FINISH

Standard finish in baked white enamel.

Other colours are available on request.

MODEL: NT-C

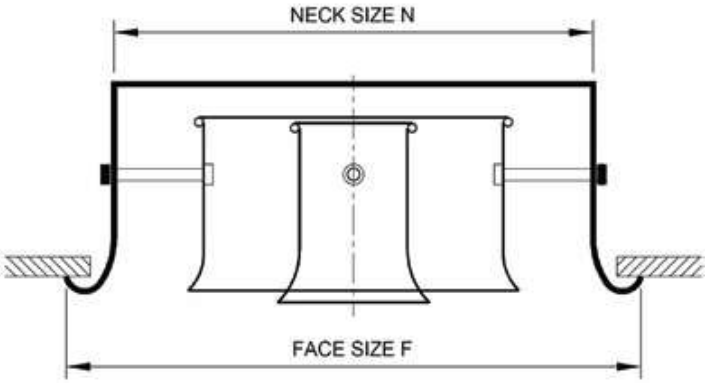

DIMENSIONS

NECK SIZE N (mm)	FACE SIZE F (mm)
Φ150	Φ192
Φ200	Φ272
Φ250	Φ328
Φ300	Φ378
Φ350	Φ428
Φ400	Φ478

KYODO reserves the right to make changes without written notice. The actual product might differ from pictures shown. Drawings are not meant to show exact details of every aspects of the product.

TECHNICAL PERFORMANCE DATA
MODEL: NT-C

Neck Size	Neck Velocity (m/s)	2	3	4	5	6	7	8	10
Φ150	Air Volume CMH	130	195	260	320	385	450	510	640
	Throw (m)	2.8	4.0	4.8	5.1	5.6	6.2	6.7	7.6
	S.P. (Pa)	8	15	23	33	44	54	64	81
	NC	17	20	25	31	36	40	44	51
Φ200	Air Volume CMH	230	340	455	570	680	795	905	1135
	Throw (m)	3.9	5.3	6.1	7.0	7.8	8.2	8.7	9.8
	S.P. (Pa)	8	14	22	31	42	53	61	78
	NC	18	20	23	29	35	38	43	48
Φ250	Air Volume CMH	355	530	710	890	1060	1240	1415	1770
	Throw (m)	4.7	6.6	7.8	8.8	9.5	10.2	10.9	12.4
	S.P. (Pa)	7	13	20	28	39	50	58	72
	NC	17	20	24	28	33	36	41	45
Φ300	Air Volume CMH	510	765	1020	1275	1530	1785	2040	2550
	Throw (m)	5.7	7.9	9.3	10.4	11.2	12.2	13.1	15.8
	S.P. (Pa)	7	13	19	28	40	51	57	70
	NC	16	20	24	28	34	38	40	45
Φ350	Air Volume CMH	695	1040	1390	1735	2080	2425	2775	3465
	Throw (m)	6.6	9.4	10.9	12.0	13.2	14.3	15.5	17.9
	S.P. (Pa)	6	12	20	27	38	50	58	71
	NC	16	20	25	30	34	38	42	45
Φ400	Air Volume CMH	905	1360	1810	2265	2715	3170	3620	4525
	Throw (m)	7.4	10.8	11.9	13.5	14.8	16.2	17.5	20.2
	S.P. (Pa)	6	12	19	28	38	51	58	72
	NC	15	19	24	29	35	40	42	46

- Result of performance is tested under NATA, in accordance with ASHRAE STANDARD 70-2006.
- All values are tested at 0^0 angle of air discharge.
- SP - Static Pressure drops are in Pascals.
- NC - Noise Criterion based upon room absorption of 10 dB.
- Throw - Throw at 0.5m/s terminal velocity in metres.

KYODO reserves the right to make changes without written notice. The actual product might differ from pictures shown. Drawings are not meant to show exact details of every aspects of the product.

SPOT LOUVRE/PUNKAH LOUVRE

FEATURES

- Nozzle type outlet is most suitable for spot cooling because its direction and volume of air can be adjusted easily to suit one's requirement.
- They are recommended in aircraft, electrical or electronic plants and telephone exchange.
- Constructed of aluminium alloy.

FINISH

Standard finish in natural anodizing.

Other colours in baked enamel are available on request.

ORDER KEY

PK

MODEL: PK

SPECIFICATION DRAWINGS

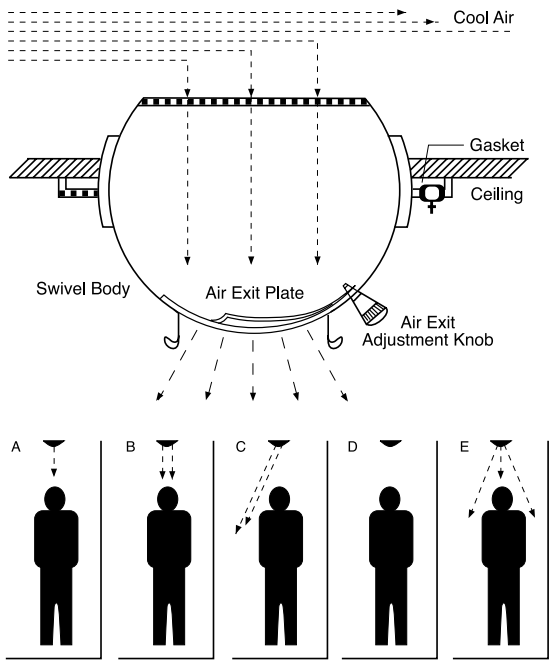

A : Spot Air Flow
B : Air Volume Control
C : Air Direction Control
D : On/Off Operation
E : Air Shower For Particle/Dust Control

KYODO reserves the right to make changes without written notice. The actual product might differ from pictures shown. Drawings are not meant to show exact details of every aspects of the product.

TECHNICAL PERFORMANCE DATA
MODEL: PK

Size	Neck Velocity (m/s)	2	3	4	5	6	7	8	9	10	11	12
No. 3	Air Volume (CMH)	8	12	16	20	24	29	33	36	41	46	49
	Throw (m)	0.8	1.2	1.5	1.9	2.3	2.6	2.9	3.4	3.7	4.1	4.5
	S.P. (Pa)	2	3	6	11	13	19	23	28	36	41	53
	NC	<20	<20	20	25	28	31	34	36	38	40	42
No. 3.5	Air Volume (CMH)	11	16	21	26	32	37	42	47	53	58	63
	Throw (m)	0.9	1.3	1.7	2.2	2.6	3.0	3.4	4.0	4.4	4.8	5.2
	S.P. (Pa)	2	3	7	12	15	21	27	34	42	50	67
	NC	<20	<20	20	26	28	32	34	36	39	41	43
No. 4	Air Volume (CMH)	14	21	28	36	42	49	57	64	71	78	85
	Throw (m)	1.0	1.5	2.0	2.5	3.0	3.4	3.9	4.6	5.0	5.5	6.0
	S.P. (Pa)	2	4	8	13	16	22	30	39	48	59	70
	NC	<20	<20	21	26	29	32	35	37	39	41	43
No. 4.5	Air Volume (CMH)	19	29	38	48	57	67	76	86	95	105	115
	Throw (m)	1.1	1.5	2.2	2.8	3.3	3.8	4.4	5.0	5.6	6.2	6.7
	S.P. (Pa)	2	5	9	13	17	23	33	44	54	65	75
	NC	<20	<20	21	26	29	32	35	37	39	41	43
No. 5	Air Volume (CMH)	24	36	48	60	72	84	96	107	119	131	143
	Throw (m)	1.3	1.6	2.5	3.1	3.7	4.3	4.9	5.6	6.2	6.8	7.6
	S.P. (Pa)	3	6	10	14	18	25	36	48	60	71	82
	NC	<20	<20	22	27	30	33	36	38	40	42	44
No. 6	Air Volume (CMH)	32	48	64	79	95	111	127	143	159	175	191
	Throw (m)	1.5	2.3	3.0	3.7	4.4	5.2	5.9	6.6	7.3	8.2	9.0
	S.P. (Pa)	3	6	10	14	20	30	42	53	64	76	86
	NC	<20	<20	23	28	31	34	37	39	41	43	46
No. 7	Air Volume (CMH)	46	69	92	115	138	160	184	206	229	252	275
	Throw (m)	1.8	2.8	3.6	4.5	5.4	6.3	7.2	8.2	9.1	10.2	11.1
	S.P. (Pa)	3	6	11	15	22	32	44	55	67	82	96
	NC	<20	<20	24	29	32	36	38	40	42	44	47
No. 8	Air Volume (CMH)	57	86	113	141	170	198	226	265	283	311	339
	Throw (m)	2.2	3.3	4.3	5.4	6.5	7.5	8.5	9.8	11.1	12.2	13.3
	S.P. (Pa)	3	6	11	16	24	35	46	58	70	88	106
	NC	<20	<20	25	30	34	38	40	42	44	46	48
No. 10	Air Volume (CMH)	111	168	222	277	332	388	443	499	554	609	685
	Throw (m)	2.8	4.2	5.5	6.6	8.3	9.5	12.2	13.2	14.1	15.7	17.2
	S.P. (Pa)	3	7	12	18	26	38	50	63	76	96	115
	NC	<20	20	27	33	37	40	42	44	47	49	52
No. 12	Air Volume (CMH)	164	231	308	385	462	539	616	716	796	876	923
	Throw (m)	3.3	4.8	6.6	8.1	9.8	12.0	13.2	14.9	16.5	18.4	20.2
	S.P. (Pa)	3	8	13	19	28	39	50	65	80	98	115
	NC	<20	21	28	34	38	42	44	46	49	54	59
No. 14	Air Volume (CMH)	204	305	406	510	612	714	815	918	1020	1122	1224
	Throw (m)	4.0	6.2	8.2	10.0	12.0	14.0	16.5	18.5	20.5	22.9	25.2
	S.P. (Pa)	3	8	14	20	28	39	49	64	78	97	115
	NC	<20	22	29	35	39	43	46	48	51	53	56
No. 16	Air Volume (CMH)	299	448	598	747	897	1048	1198	1348	1495	1645	1794
	Throw (m)	4.4	6.7	9.0	11.0	13.0	16.2	18.1	20.2	22.3	24.9	27.5
	S.P. (Pa)	4	8	14	19	27	38	49	62	74	94	113
	NC	<20	22	29	36	40	44	48	50	53	56	59
No. 18	Air Volume (CMH)	382	573	764	956	1146	1331	1528	1719	1910	2101	2292
	Throw (m)	5.0	7.4	10.0	12.0	15.0	17.3	19.7	22.1	24.5	27.4	30.2
	S.P. (Pa)	4	9	13	18	26	37	48	60	72	93	113
	NC	<20	23	30	36	41	45	49	52	55	58	61
No. 20	Air Volume (CMH)	543	815	1086	1358	1629	1901	2173	2444	2716	2988	3259
	Throw (m)	6.0	9.0	12.1	15.0	18.0	21.5	24.5	27.3	30.0	33.3	35.5
	S.P. (Pa)	4	9	13	17	24	37	48	59	69	89	110
	NC	<20	24	31	37	43	47	51	54	57	60	63

- Throw - Throw at 0.5m/s terminal velocity in metres.
- SP - Static Pressure drops are in Pascals.
- NC - Noise Criterion based upon room absorption of 10 dB.

KYODO reserves the right to make changes without written notice. The actual product might differ from pictures shown. Drawings are not meant to show exact details of every aspects of the product.

DESIGN FEATURES

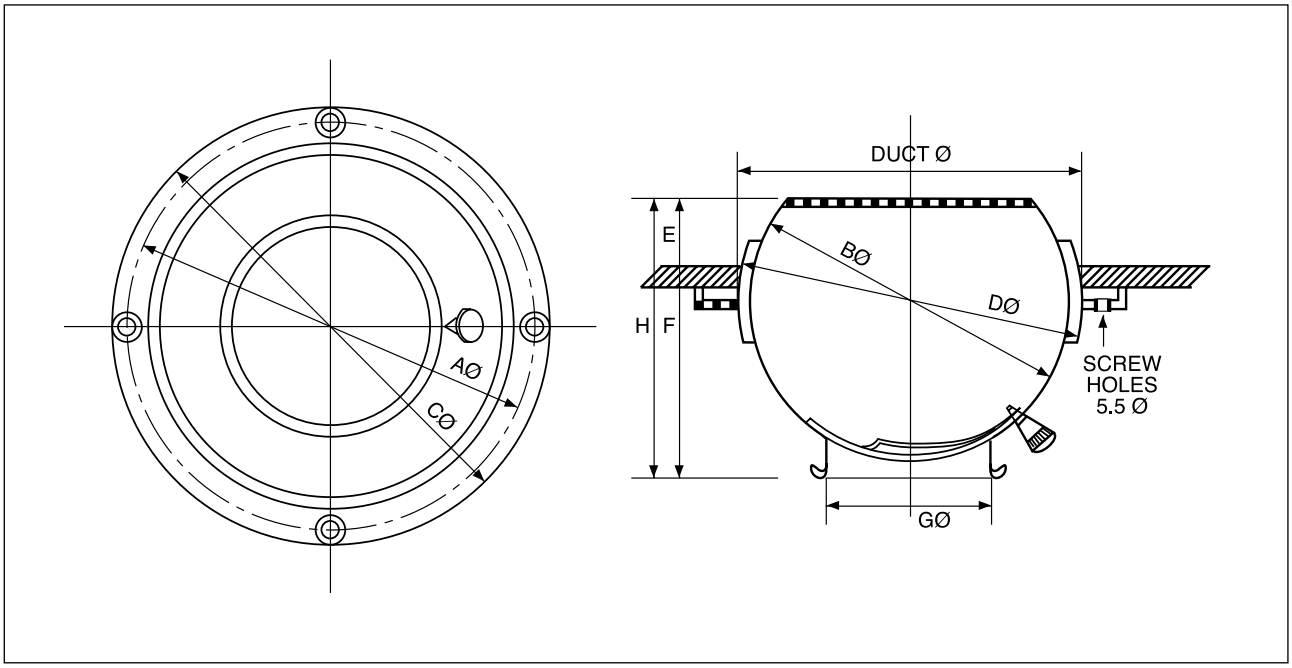

SIZES AND DIMENSIONS

SIZE	A	B	C	D	E	F	G	H	Duct Opening	Screw Holes	Weight
No. 3	97	75	115	82	17	53	38	70	85	3	130g
No. 3.5	107	85	125	92	21	58	43	79	95	3	160g
No. 4	122	100	140	107	24	65	50	89	110	4	180g
No. 4.5	137	115	155	122	29	73	58	102	125	4	230g
No. 5	152	130	170	137	33	82	65	115	140	5	340g
No. 6	172	150	190	158	38	94	75	132	160	5	370g
No. 7	213	178	231	185	38	111	90	149	190	5	460g
No. 8	232	200	250	204	44	120	100	164	200	5	580g
No. 10	304	267	324	276	50	174	140	224	280	5	950g
No. 12	342	305	363	314	63	200	165	263	318	5	1180g
No. 14	342	305	363	314	60	185	190	245	318	5	1180g
No. 16	451	410	470	419	92	248	230	340	425	8	2000g
No. 18	511	470	535	479	95	295	260	390	486	8	2630g
No. 20	511	470	535	479	95	295	310	390	486	8	2730g

KYODO reserves the right to make changes without written notice. The actual product might differ from pictures shown. Drawings are not meant to show exact details of every aspects of the product.

DRUM JET DIFFUSER

FEATURES

- KYODO series DJ drum jet diffuser is specially designed for large airflow and long throw.
- It consists of fixed outer frame, adjustable inner core and blades.
- The inner core can be adjusted up to 30° upward or downward.
- The blades can be adjusted up to 45° left or right.
- Due to its large opening area, it provides maximum air volume with minimum pressure drop and low noise level.
- Suitable for exposed duckwork or surface mounted.
- Constructed of aluminium or galvanized steel.

MODEL: DJ

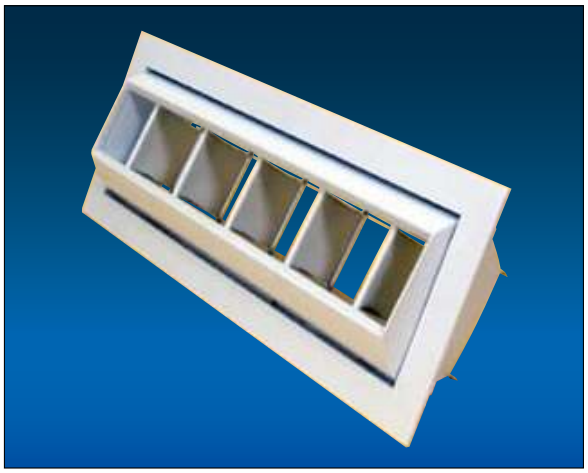

FINISH

Standard finish in baked white enamel.
Other colours are available on request.

ACCESSORIES

Air Volume Control Damper:

- Opposed Blade Damper (VCD).

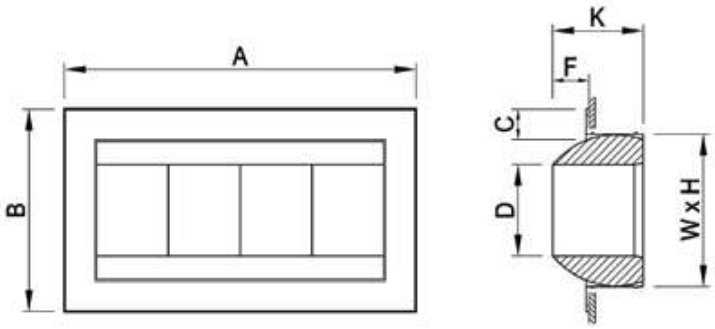

DIMENSIONS

SIZE	W	A	H	B	K	D	F	C
250x150	250	300	150	200	90	90	40	30
300x150	300	350	150	200	90	90	40	30
475x150	475	525	150	200	90	90	40	30
625x150	625	675	150	200	90	90	40	30
500x250	500	528	250	332	150	150	60	50
650x250	650	732	250	332	150	150	60	50
750x250	750	832	250	332	150	150	60	50
900x250	900	982	250	332	150	150	60	50

KYODO reserves the right to make changes without written notice. The actual product might differ from pictures shown. Drawings are not meant to show exact details of every aspects of the product.

TECHNICAL PERFORMANCE DATA
MODEL: DJ

Neck Size (mm)	Velocity (m/s)	1.0	1.5	2.0	2.5	3.0	3.5	4.0	4.5
	Pressure Loss (Pa)	**9**	**15**	**25**	**31**	**39**	**50**	**76**	**97**
250x150	CMH	135	205	270	340	405	475	540	605
	Throw (m)	2.8	4.2	5.8	6.5	7.2	7.7	8.4	8.8
	NC	<20	<20	<20	<20	22	26	31	35
300x150	CMH	165	245	325	405	485	570	650	730
	Throw (m)	3.2	4.7	6.4	7.1	8.0	8.8	9.4	9.9
	NC	<20	<20	<20	<20	23	29	33	37
475x150	CMH	255	385	515	640	770	900	1025	1155
	Throw (m)	3.5	5.1	6.9	8.0	8.7	9.5	10.3	10.8
	NC	<20	<20	<20	21	25	31	35	38
625x150	CMH	340	505	675	845	1015	1180	1350	1520
	Throw (m)	3.8	5.7	7.8	8.7	9.5	10.4	11.0	11.5
	NC	<20	<20	<20	22	27	33	38	40
500x250	CMH	450	675	900	1125	1350	1575	1800	2025
	Throw (m)	3.2	4.9	6.5	7.3	8.4	9.0	9.6	10.1
	NC	<20	<20	<20	<20	24	28	34	38
650x250	CMH	585	878	1170	1465	1755	2050	2340	2635
	Throw (m)	3.7	5.4	7.3	8.4	9.2	10.0	10.5	11.4
	NC	<20	<20	<20	20	25	31	36	39
750x250	CMH	675	1015	1350	1690	2025	2365	2700	3040
	Throw (m)	4.0	5.9	8.0	9.2	10.1	10.9	11.6	12.5
	NC	<20	<20	<20	21	26	32	37	40
900x250	CMH	810	1215	1620	2025	2430	2835	3240	3645
	Throw (m)	4.3	6.5	8.9	10.0	10.9	11.8	12.7	13.2
	NC	<20	<20	<20	22	29	34	38	41

- NC - Based on room absorption of 10dB, re 10-12 watts.
- Throw - Throw at 0.5m/s terminal velocity in metres.

KYODO reserves the right to make changes without written notice. The actual product might differ from pictures shown. Drawings are not meant to show exact details of every aspects of the product.

ROUND CEILING DIFFUSER

FEATURES

- KYODO series C-2 Round ceiling diffusers are designed for both heating and cooling application.
- Its fashionable appearance makes it most popular with modern architectural designs.
- **Super low noise, suitable for use in noise-sensitive area such as performing theatres, studios, concert halls.**
- All sizes have 3 cones, giving a uniform appearance where different sizes are used in the same area.
- Round ceiling diffuser gives the most even air distribution due to its round streamline cones.
- Uniform, 360 degree discharge pattern.
- Gravity lock arrangement permits fast and easy removal of inner cores.
- A gang operated radial blades volume damper (SED II) is used for easy adjustment from diffuser face.
- Constructed of aluminium.

FINISH

Standard finish in baked white enamel.
Other colours are available on request.

ACCESSORIES

Air Volume Control Damper:

- Radial Type (SED II) for Neck Size from Ø150 to Ø350.
- Butterfly Type (B II) for Neck Size from Ø400 to Ø450.

MODEL: C-2

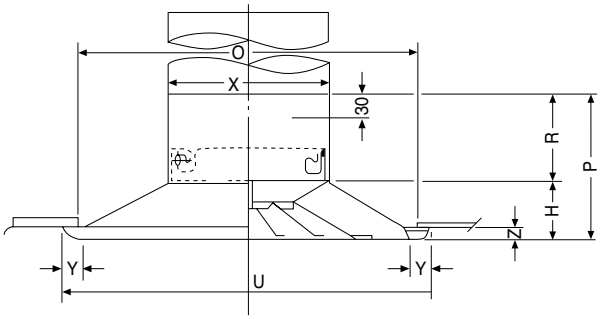

DIMENSION

No.	U	O	X	H	R	P	Y	Z
15	345	317	152	50	100	150	20	10
20	453	422	202	61	100	165	25	15
25	569	528	256	83	100	180	25	19
30	695	642	302	85	100	185	30	20
35	781	734	351	109	100	202	35	22
37.5	855	810	377	118	100	218	35	22
40	905	845	404	118	100	218	40	22
45	1029	965	454	122	100	222	40	25

Dimensions are in mm.

KYODO reserves the right to make changes without written notice. The actual product might differ from pictures shown. Drawings are not meant to show exact details of every aspects of the product.

TECHNICAL PERFORMANCE DATA
MODEL: C-2

NECK SIZE C (mm)	Neck Velocity (m/s)		2.0	2.5	3.0	3.5	4.0	4.5	5.0	6.0
Φ 150	Air Volume CMH		130	160	190	225	255	287	320	385
	Throw (m)	Horizontal	<1.0	1.1	1.4	1.6	1.8	2.2	2.4	2.8
		Vertical	1.0	1.2	1.8	2.5	3.1	3.4	3.8	4.4
	S.P. (Pa)	Horizontal	<10	15	22	28	35	43	56	74
		Vertical	10	16	23	29	40	45	58	85
	NR	Horizontal	<20	<20	<20	<20	<20	22	26	32
		Vertical	<20	<20	<20	<20	21	25	29	34
Φ 200	Air Volume CMH		230	285	340	396	455	510	565	680
	Throw (m)	Horizontal	1.0	1.2	1.5	1.7	1.9	2.2	2.6	3.0
		Vertical	1.5	2.2	2.8	3.4	3.9	4.3	4.8	5.4
	S.P. (Pa)	Horizontal	11	16	21	26	32	39	51	75
		Vertical	11	18	22	30	38	47	58	82
	NR	Horizontal	<20	<20	<20	<20	24	28	30	37
		Vertical	<20	<20	<20	20	25	28	31	37
Φ 250	Air Volume CMH		355	445	530	620	710	795	885	1060
	Throw (m)	Horizontal	1.0	1.3	1.6	1.8	2.2	2.4	2.6	3.2
		Vertical	2.2	3.0	3.5	4.0	4.6	5.0	5.3	6.2
	S.P. (Pa)	Horizontal	12	14	18	28	38	45	51	78
		Vertical	13	16	22	30	39	48	57	82
	NR	Horizontal	<20	<20	<20	22	28	31	34	40
		Vertical	<20	<20	<20	23	29	32	35	41
Φ 300	Air Volume CMH		510	640	765	890	1020	1145	1275	1530
	Throw (m)	Horizontal	1.0	1.4	1.7	2.0	2.3	2.6	2.8	3.4
		Vertical	2.6	3.6	4.2	4.8	5.3	5.7	6.0	6.6
	S.P. (Pa)	Horizontal	10	17	21	29	38	42	52	77
		Vertical	11	18	22	30	40	48	57	82
	NR	Horizontal	<20	<20	<20	<20	27	29	33	40
		Vertical	<20	<20	20	24	29	31	36	42
Φ 350	Air Volume CMH		695	865	1040	1215	1385	1560	1735	2080
	Throw (m)	Horizontal	1.2	1.5	1.8	2.2	2.5	2.7	3.0	3.5
		Vertical	3.2	4.0	4.7	5.3	5.7	6.0	6.4	7.1
	S.P. (Pa)	Horizontal	10	15	22	29	38	44	54	78
		Vertical	11	16	23	31	40	46	56	80
	NR	Horizontal	<20	<20	<20	<20	24	28	32	43
		Vertical	<20	<20	24	28	31	34	38	44
Φ 400	Air Volume CMH		905	1130	1360	1585	1810	2035	2265	2715
	Throw (m)	Horizontal	1.2	1.7	1.9	2.3	2.7	3.0	3.2	3.9
		Vertical	3.6	4.4	5.0	5.7	6.2	6.5	7.0	7.6
	S.P. (Pa)	Horizontal	10	15	22	28	36	43	55	78
		Vertical	11	16	24	30	37	45	57	80
	NR	Horizontal	<20	<20	<20	<20	23	27	32	36
		Vertical	<20	22	28	32	35	38	41	45
Φ 450	Air Volume CMH		1145	1435	1720	2005	2290	2575	2865	3435
	Throw (m)	Horizontal	1.4	1.8	2.4	2.6	2.9	3.2	3.4	4.0
		Vertical	3.8	4.9	5.6	6.5	7.0	7.6	8.2	8.6
	S.P. (Pa)	Horizontal	11	16	23	29	38	45	56	80
		Vertical	12	17	25	31	39	46	58	82
	NR	Horizontal	<20	<20	22	25	29	34	40	44
		Vertical	<20	23	29	33	36	41	44	48

- Result of performance is tested under NATA
- SP – Static Pressure drops are in Pascals
- NR – Noise rating in dB re 10^{-12} watts. Room correction of -6dB
- Throw – Throw at 0.5 m/s Terminal Velocity in metres (as per ADC 1062 R3)

KYODO reserves the right to make changes without written notice. The actual product might differ from pictures shown. Drawings are not meant to show exact details of every aspects of the product.

ROUND CEILING DIFFUSER

FEATURES

- KYODO series C-3 round ceiling diffusers are designed for both heating and cooling application.
- Its fashionable appearance makes it most popular with modern architectural designs.
- Super compact design for space-constraint area.
- All sizes have 3 cones, giving a uniform appearance where different sizes are used in the same area.
- Round ceiling diffuser gives the most even air distribution due to its round streamline cones.
- Uniform, 360 degree discharge pattern.
- Fast and easy removal of inner cores.
- A gang operated radial blades volume damper (SED II) is used for easy adjustment from diffuser face.
- Constructed of aluminium.

FINISH

Standard finish in baked white enamel.

Other colours are available on request.

ACCESSORIES

Air Volume Control Damper:

- Radial Type (SED II) for Neck Size from Ø150 to Ø350.
- Butterfly Type (B II) for Neck Size Ø400.

MODEL: C-3

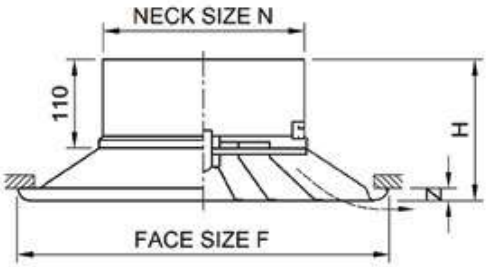

HORIZONTAL THROW

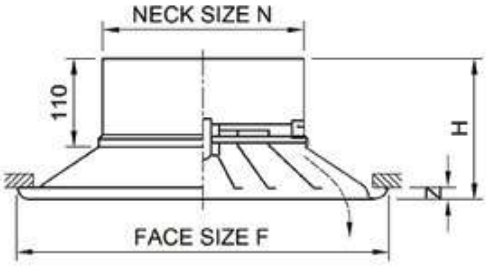

VERTICAL THROW

DIMENSIONS

NECK SIZE N (mm)	F (mm)	OPENING C (mm)	Z (mm)	H (mm)
Ø 150	Ø 338	Ø 295	15	155
Ø 200	Ø 438	Ø 385	19	165
Ø 250	Ø 518	Ø 465	19	175
Ø 300	Ø 608	Ø 555	22	185
Ø 350	Ø 708	Ø 635	22	195
Ø 400	Ø 782	Ø 735	22	200

KYODO reserves the right to make changes without written notice. The actual product might differ from pictures shown. Drawings are not meant to show exact details of every aspects of the product.

TECHNICAL PERFORMANCE DATA (With Damper)
MODEL: C-3

NECK SIZE C (mm)	Neck Velocity (m/s)		2.0	2.5	3.0	3.5	4.0	4.5	5.0	6.0
Φ 150	Air Volume CMH		130	160	190	225	255	290	320	385
	Throw (m)	Horizontal	<1.0	<1.0	<1.0	<1.0	1.0	1.1	1.3	1.8
		Vertical	2.8	4.2	5.6	6.8	7.9	9.0	10.1	12.0
	S.P. (Pa)	Horizontal	10	15	22	30	38	49	60	85
		Vertical	11	16	24	31	39	50	61	86
	NC	Horizontal	18	24	32	36	41	45	48	54
		Vertical	20	25	33	37	43	46	49	56
Φ 200	Air Volume CMH		230	285	340	396	455	510	565	680
	Throw (m)	Horizontal	<1.0	1.0	1.1	1.2	1.6	1.8	2.2	3.0
		Vertical	2.5	3.6	4.7	5.8	6.9	7.8	8.8	10.5
	S.P. (Pa)	Horizontal	10	15	22	30	38	48	59	84
		Vertical	11	16	23	31	39	49	61	86
	NC	Horizontal	18	25	32	36	40	44	47	52
		Vertical	20	26	33	37	41	45	49	54
Φ 250	Air Volume CMH		355	445	530	620	710	795	885	1060
	Throw (m)	Horizontal	<1.0	1.0	1.2	1.5	1.8	2.2	2.5	3.3
		Vertical	2.0	3.1	4.1	5.2	6.1	7.2	7.9	9.4
	S.P. (Pa)	Horizontal	9	14	19	24	30	37	44	62
		Vertical	10	15	20	25	31	38	46	64
	NC	Horizontal	13	20	26	30	35	39	43	48
		Vertical	15	21	27	31	36	40	44	50
Φ 300	Air Volume CMH		510	640	765	890	1020	1145	1275	1530
	Throw (m)	Horizontal	1.0	1.2	1.5	1.8	2.3	2.7	3.2	4.4
		Vertical	1.9	2.9	3.8	4.6	5.6	6.4	7.2	8.7
	S.P. (Pa)	Horizontal	10	14	20	25	33	41	49	66
		Vertical	11	15	21	27	34	42	50	68
	NC	Horizontal	18	24	29	33	38	41	44	48
		Vertical	19	25	30	34	39	42	45	49
Φ 350	Air Volume CMH		695	865	1040	1215	1385	1560	1735	2080
	Throw (m)	Horizontal	1.0	1.2	1.6	2.1	2.7	3.3	4.1	5.7
		Vertical	1.6	1.9	3.3	4.1	4.9	5.7	6.4	7.7
	S.P. (Pa)	Horizontal	10	14	21	28	37	46	56	78
		Vertical	11	15	22	29	38	47	57	80
	NC	Horizontal	19	24	29	34	38	42	46	51
		Vertical	20	25	30	35	39	43	47	52
Φ 400	Air Volume CMH		905	1130	1360	1585	1810	2035	2265	2715
	Throw (m)	Horizontal	1.0	1.2	1.7	2.1	2.7	3.3	4.1	5.7
		Vertical	1.7	2.5	3.3	4.1	4.9	5.5	6.2	7.4
	S.P. (Pa)	Horizontal	10	14	20	27	33	40	49	67
		Vertical	10	15	21	28	34	41	51	68
	NC	Horizontal	21	25	30	35	38	41	45	49
		Vertical	21	26	31	36	39	42	46	50

- Result of performance is tested under NATA, in accordance with ASHRAE STANDARD 70-2006.
- SP - Static Pressure drops are in Pascals.
- NC - Noise Criterion based upon room absorption of 10 dB.
- Throw - Throw at 0.5m/s terminal velocity in metres.

KYODO reserves the right to make changes without written notice. The actual product might differ from pictures shown. Drawings are not meant to show exact details of every aspects of the product.

ROUND CEILING DIFFUSER

FEATURES

- KYODO series PC Round ceiling diffusers are designed for both heating and cooling application as well as for marine vessels.
- Its hi-tech appearance makes it most popular with latest design trend.
- The air pattern delivers effective room air distribution, even when the volume varies over a wide range.
- Uniform, 360 degree horizontal air pattern, with minimum noise and pressure drop.
- Gravity lock arrangement permits easy removal of inner panel.
- A gang operated radial blades volume damper (SED II) is used for easy adjustment from room side by screwdriver.
- Constructed of aluminium.

FINISH

Standard finish in baked white enamel.
Other colours are available on request.

ACCESSORIES

Air Volume Control Damper:
- Radial Type (SED II) for Neck Size from Ø150 to Ø300.

MODEL: PC

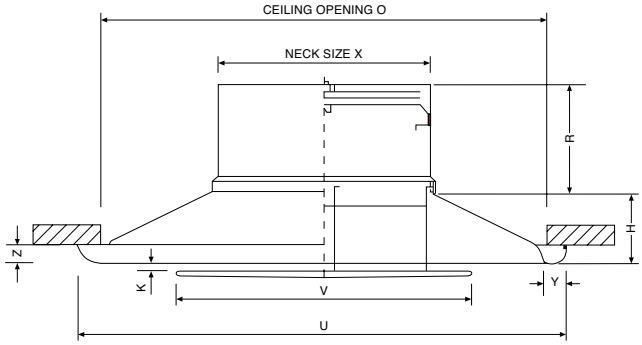

DIMENSION

No.	U	V	O	X	K	H	R	Y	Z
15	345	220	317	152	3	50	110	20	10
20	453	290	422	202	3	61	110	25	15
25	569	375	528	256	3	83	110	25	19
30	695	445	642	302	3	85	110	30	20

Dimensions are in mm.

KYODO reserves the right to make changes without written notice. The actual product might differ from pictures shown. Drawings are not meant to show exact details of every aspects of the product.

TECHNICAL PERFORMANCE DATA
MODEL: PC

NECK SIZE (mm)	CAP ℓ/s	50	60	70	80	90	100	110	120	130	140	150	200	250	300	350	400	450	500
150 dia	S. P.																		
	NR						(Data will be furnished upon request)												
	THROW																		
200 dia	S. P.									25	31	36	61	90	126	169			
	NR									18	21	23	31	38	43	48			
	THROW									2.1	2.3	2.5	3.0	3.3	3.5	3.7			
250 dia	S. P.											20	36	57	81	108	139		
	NR											13	25	31	38	42	47		
	THROW											1.6	2.1	2.7	3.4	3.7	3.9		
300 dia	S. P.													29	39	53	70	85	105
	NR													19	26	31	37	40	45
	THROW													2.4	2.9	3.3	3.5	3.8	3.9

- Result of performance is tested under NATA
- SP – Static Pressure drops are in Pascals
- NR – Noise rating in dB re 10^{-12} watts. Room correction of -10dB
- CAP – Capacity of flow in litre per second
- Throw – Throw at 0.5 m/s Terminal Velocity in metres (as per ADC 1062 R3)

KYODO reserves the right to make changes without written notice. The actual product might differ from pictures shown. Drawings are not meant to show exact details of every aspects of the product.

ROUND CEILING DIFFUSER

FEATURES

- KYODO series PC round ceiling diffusers are designed for both heating and cooling application.
- Its fashionable appearance makes it most popular with modern architectural designs.
- Super compact design for space-constraint area.
- The air pattern delivers effective room air distribution, even when the volume varies over a wide range.
- Uniform, 360 degree horizontal air pattern, with minimum noise and pressure drop.
- Gravity lock arrangement permits easy removal of inner panel.
- A gang operated radial blades volume damper (SED II) is used for easy adjustment from room side by screwdriver.
- Constructed of aluminium.

MODEL: PC-2

FINISH

Standard finish in baked white enamel.
Other colours are available on request.

ACCESSORIES

Air Volume Control Damper:
- Radial Type (SED II).

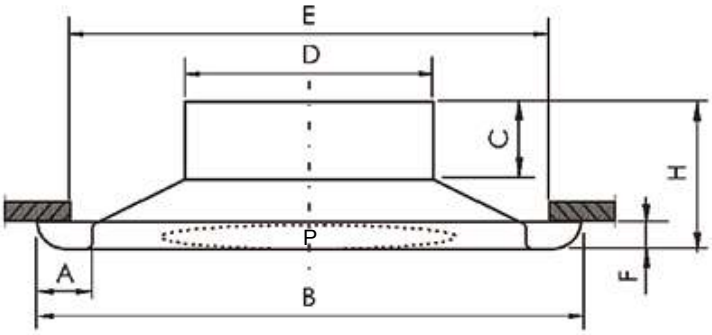

DIMENSIONS

NECK SIZE D (mm)	B (mm)	A (mm)	E (mm)	F (mm)	C (mm)	H (mm)	P (mm)
Φ 150	Φ 285	35	255	9	80	125	180
Φ 200	Φ 343	35	310	9	80	125	220
Φ 250	Φ 457	40	420	9	80	135	280
Φ 300	Φ 572	40	530	13	80	145	360
Φ 350	Φ 686	45	630	16	80	155	430

KYODO reserves the right to make changes without written notice. The actual product might differ from pictures shown. Drawings are not meant to show exact details of every aspects of the product.

TECHNICAL PERFORMANCE DATA
MODEL: PC-2

NECK SIZE C (mm)	Neck Velocity (m/s)		2.0	2.5	3.0	3.5	4.0	4.5	5.0	6.0
Φ 150	Air Volume CMH		130	160	200	230	265	290	345	400
	Throw (m)	Horizontal	0.4	0.6	0.7	0.9	1.1	1.2	1.5	1.6
		Vertical	2.0	2.9	3.4	3.9	4.5	5.2	5.6	6.5
	S.P. (Pa)	Horizontal	3	4	6	8	10	13	16	24
		Vertical	6	10	14	18	22	26	36	49
	NC	Horizontal	<20	20	23	27	31	36	40	43
		Vertical	<20	22	27	31	35	38	43	47
Φ 200	Air Volume CMH		230	295	350	400	465	520	580	700
	Throw (m)	Horizontal	0.8	0.9	1.1	1.3	1.5	1.7	1.9	2.3
		Vertical	1.4	1.7	2.1	2.4	2.8	3.1	3.4	4.0
	S.P. (Pa)	Horizontal	2	3	5	7	9	12	15	22
		Vertical	5	9	12	16	21	24	33	45
	NC	Horizontal	<20	<20	22	25	29	33	37	41
		Vertical	<20	20	25	29	32	36	39	45
Φ 250	Air Volume CMH		360	450	545	635	710	810	900	1080
	Throw (m)	Horizontal	1.0	1.2	1.3	1.6	1.7	1.9	2.2	2.7
		Vertical	4.0	5.2	6.3	7.4	8.3	9.1	10.5	12.5
	S.P. (Pa)	Horizontal	2	3	5	7	9	11	14	21
		Vertical	6	10	14	18	22	26	35	48
	NC	Horizontal	<20	<20	22	29	32	37	40	44
		Vertical	<20	23	27	33	36	41	43	48
Φ 300	Air Volume CMH		520	650	775	910	1035	1160	1300	1560
	Throw (m)	Horizontal	1.1	1.3	1.7	1.8	2.0	2.3	2.5	3.2
		Vertical	5.2	6.6	7.5	8.8	10.4	11.5	13.1	15.8
	S.P. (Pa)	Horizontal	2	4	5	8	10	12	14	24
		Vertical	6	11	14	19	23	26	35	48
	NC	Horizontal	<20	<20	23	29	33	38	42	45
		Vertical	<20	24	28	35	38	42	46	50
Φ 350	Air Volume CMH		710	885	1055	1230	1405	1580	1760	2110
	Throw (m)	Horizontal	1.2	1.3	1.7	2.0	2.2	2.4	2.7	3.2
		Vertical	5.8	7.0	8.5	10.0	11.2	13.0	14.2	16.8
	S.P. (Pa)	Horizontal	3	4	6	8	11	13	16	23
		Vertical	7	12	15	19	24	28	36	50
	NC	Horizontal	<20	20	23	30	33	38	41	46
		Vertical	<20	23	28	33	37	41	44	50

- SP -Static Pressure drops are in Pascals.
- NC -Noise Criterion based upon room absorption of 10 dB re 10^{-12} watts.
- Throw -Throw at 0.5m/s terminal velocity in metres.

T-TYPE CEILING DIFFUSER

FEATURES

- KYODO series T-4A are able to handle an unusually large amount of air for a given pressure drop and noise level.
- Maintains an unbroken horizontal flow pattern from maximum CMH down to minimum.
- Specially designed to supply air flow for all shapes of room. It is also used for return air purpose sometimes for integrity to suit architectural design.
- The diffuser is made of square or rectangular shape with various flow pattern ranging from 1 to 4 ways.
- It is simple and has pleasant appearance.
- Opposed blade volume control damper is incorporated in the ceiling diffuser for square or rectangular duct. SED II is used in conjunction with round adaptor for round duct.
- Simple adjustment of damper from room side by screwdriver.
- Centre core is removable for easy maintenance.
- Material is extruded aluminium.

FINISH

Standard Finish in natural anodizes and baked enamel paints are easily available too.

ACCESSORIES

Air Volume Control Damper:

- Opposed blade volume control damper for square or rectangular neck.
- Radial Type (SED II) for round neck size from Ø150 to Ø350.
- Butterfly Type (B II) for round neck size from Ø400 to Ø500.

MODEL: T-4A

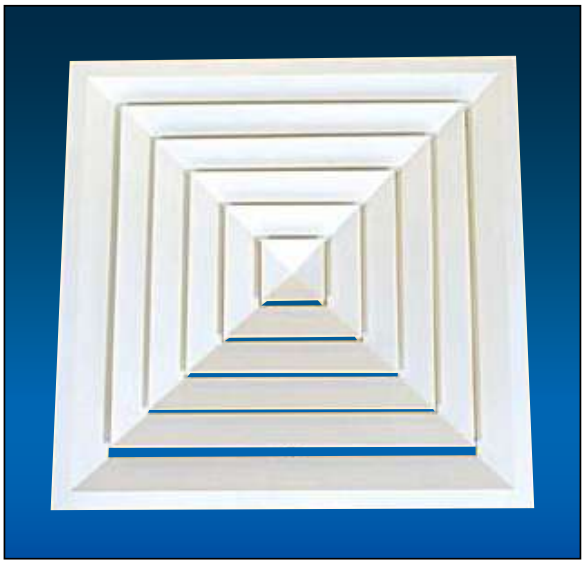

(Surface Mount) Square or Rectangular Neck

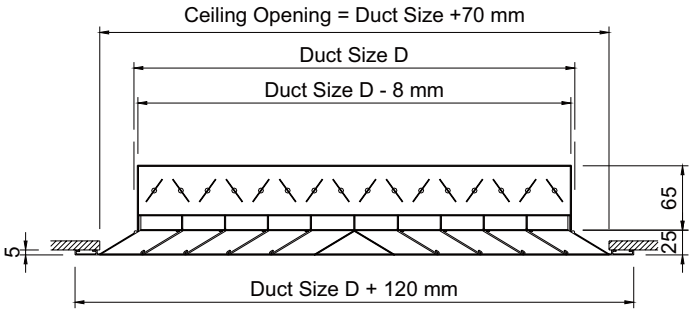

(Surface Mount) Round Neck

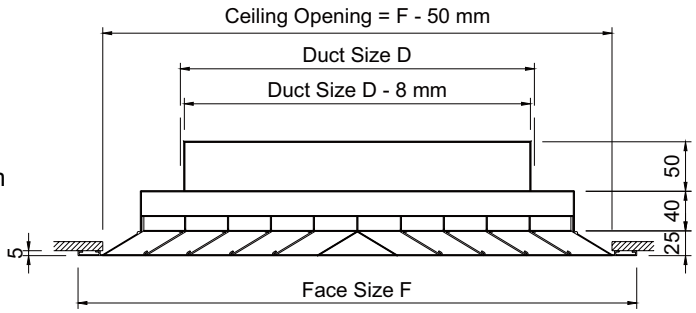

KYODO reserves the right to make changes without written notice. The actual product might differ from pictures shown. Drawings are not meant to show exact details of every aspects of the product.

TECHNICAL PERFORMANCE DATA
MODEL: T-4A

NECK SIZE (m²)	CAP ℓ/s	50	60	70	80	90	100	110	120	130	140	150	200	250	300	350	400	450	500	550	600	700	800	900	1000
150 x 150	S. P.	14	20	28	36	45	56	68	81	95	110	126	222												
	NR	<20	<20	23	26	30	33	36	38	41	43	45	53												
	THROW	2.1	2.4	2.7	3	3	3.3	3.3	3.6	3.6	3.9	3.9	4.5												
175 x 175	S. P.		11	15	20	25	30	37	44	51	60	68	115	188											
	NR		<20	<20	20	23	25	28	31	33	35	37	45	52											
	THROW		2.1	2.7	3	3	3.3	3.3	3.6	3.6	3.9	3.9	4.5	5.1											
200 x 200	S. P.			9	12	15	18	22	26	30	35	40	71	110	159										
	NR			<20	<20	<20	20	22	24	26	28	30	39	45	51										
	THROW			2.4	2.7	3	3.3	3.3	3.6	3.6	3.9	3.9	4.5	5.1	5.7										
225 x 225	S. P.					9	11	14	16	19	22	25	44	69	99	135	176								
	NR					<20	<20	<20	20	22	24	25	33	39	45	49	53								
	THROW					2.7	3	3.3	3.6	3.6	3.9	3.9	4.5	5.1	5.7	6	6.4								
250 x 250	S. P.							9	11	12	15	17	29	45	65	89	116	146							
	NR							<20	<20	<20	<20	21	28	34	39	44	48	51							
	THROW							3	3	3.3	3.6	3.9	4.5	5.1	5.7	6	6.4	7							
275 x 275	S. P.									9	10	12	20	31	45	60	78	100	123						
	NR									<20	<20	<20	24	29	37	39	43	47	50						
	THROW									3	3.3	3.6	4.5	5.1	5.7	6	6.4	7	7.3						
300 x 300	S. P.											8	14	22	31	43	56	71	87	105	125				
	NR											<20	21	26	30	35	39	42	45	48	51				
	THROW											3.3	4.2	5.1	5.7	6	6.1	7	7.3	7.6	7.9				
325 x 325	S. P.												11	16	23	31	41	51	64	77	91	116			
	NR												<20	23	27	31	35	38	41	44	47	51			
	THROW												3.9	5.1	5.7	6	6.4	7	7.3	7.6	7.9	8.5			
350 x 350	S. P.												8	12	17	23	30	38	47	57	68	92	120		
	NR												<20	20	25	28	31	34	38	40	43	47	51		
	THROW												3.6	4.5	5.3	6	6.4	7	7.3	7.6	7.9	8.5	9.1		
375 x 375	S. P.												6	9	13	18	23	29	36	43	52	70	91	116	
	NR												<20	<20	22	26	29	31	34	37	39	44	48	51	
	THROW												3.6	4.2	5.1	6	6.4	7	7.3	7.6	7.9	8.5	9.1	9.7	
400 x 400	S. P.														10	14	18	23	28	33	40	54	71	89	110
	NR														<20	23	26	29	31	34	36	41	45	48	51
	THROW														4.8	5.7	6.4	7	7.3	7.6	7.9	8.5	9.1	9.7	10.3
450 x 450	S. P.														6	9	11	14	18	21	25	34	44	56	69
	NR														<20	<20	22	25	27	29	31	35	39	42	45
	THROW														4.2	5.1	5.7	6.7	7.3	7.6	7.9	8.5	9.1	9.7	10.3
500 x 500	S. P.																	10	11	14	17	22	29	37	45
	NR																	21	23	25	27	31	34	37	40
	THROW																	6	6.7	7.3	7.9	8.5	9.1	9.7	10.3

- Result of performance is tested under NATA
- SP – Static Pressure drops are in Pascals
- NR – Noise rating in dB re 10^{-12} watts. Room correction of -6dB
- CAP – Capacity of flow in litre per second
- Throw – Throw at 0.5 m/s Terminal Velocity in metres (as per ADC 1062 R3)

* Performance data for down throw will be furnished upon request

KYODO reserves the right to make changes without written notice. The actual product might differ from pictures shown. Drawings are not meant to show exact details of every aspects of the product.

MOUNTING DETAILS:

A) LAY-IN TYPE MOUNTING

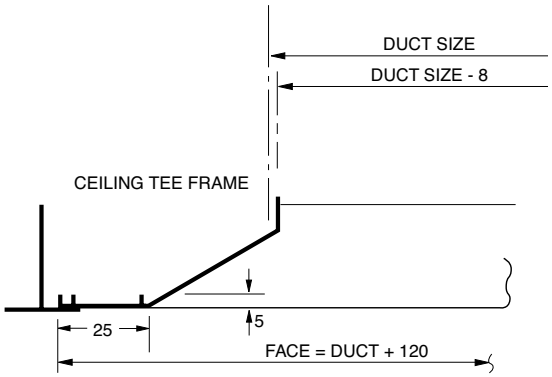

B) CONCEALED MOUNTING

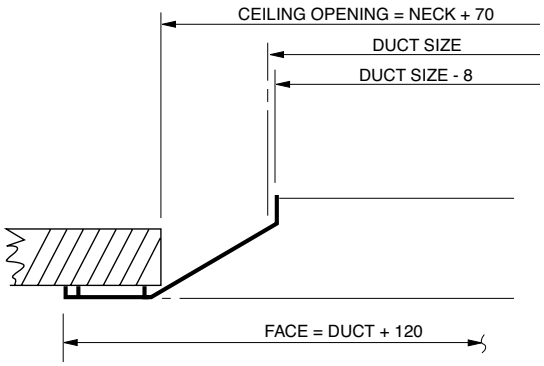

DIMENSIONAL DETAILS

NECK SIZE		FACE SIZE F	CEILING OPENING C
DUCT SIZE D	ACTUAL N		
150 x 150	142 x 142	270 x 270	220 x 220
200 x 200	192 x 192	320 x 320	270 x 270
250 x 250	242 x 242	370 x 370	320 x 320
300 x 300	292 x 292	420 x 420	370 x 370
350 x 350	342 x 342	470 x 470	420 x 420
400 x 400	392 x 392	520 x 520	470 x 470
450 x 450	442 x 442	570 x 570	520 x 520
480 x 480	472 x 472	600 x 600	550 x 550

Round adaptor with rotating fan blade volume control damper. Available for neck size: dia. 150mm
dia. 200mm
dia. 250mm
dia. 300mm
dia. 350mm

(Surface Mount) Square or Rectangular Neck

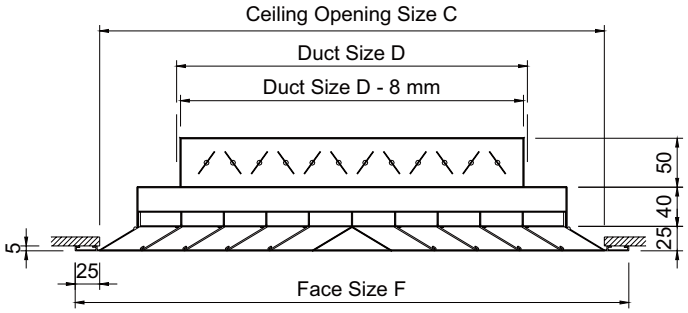

(Surface Mount) Round Neck

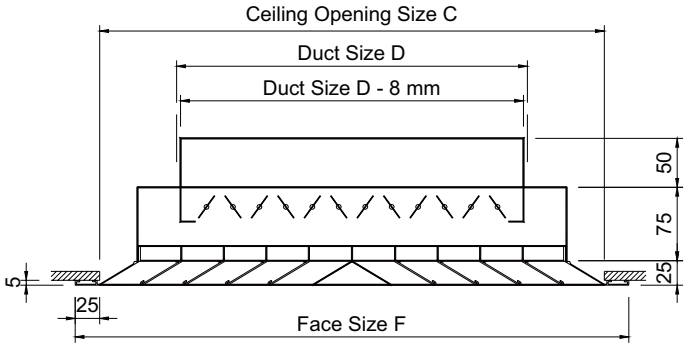

(ALL MODELS) · OPTIONAL PATTERNS

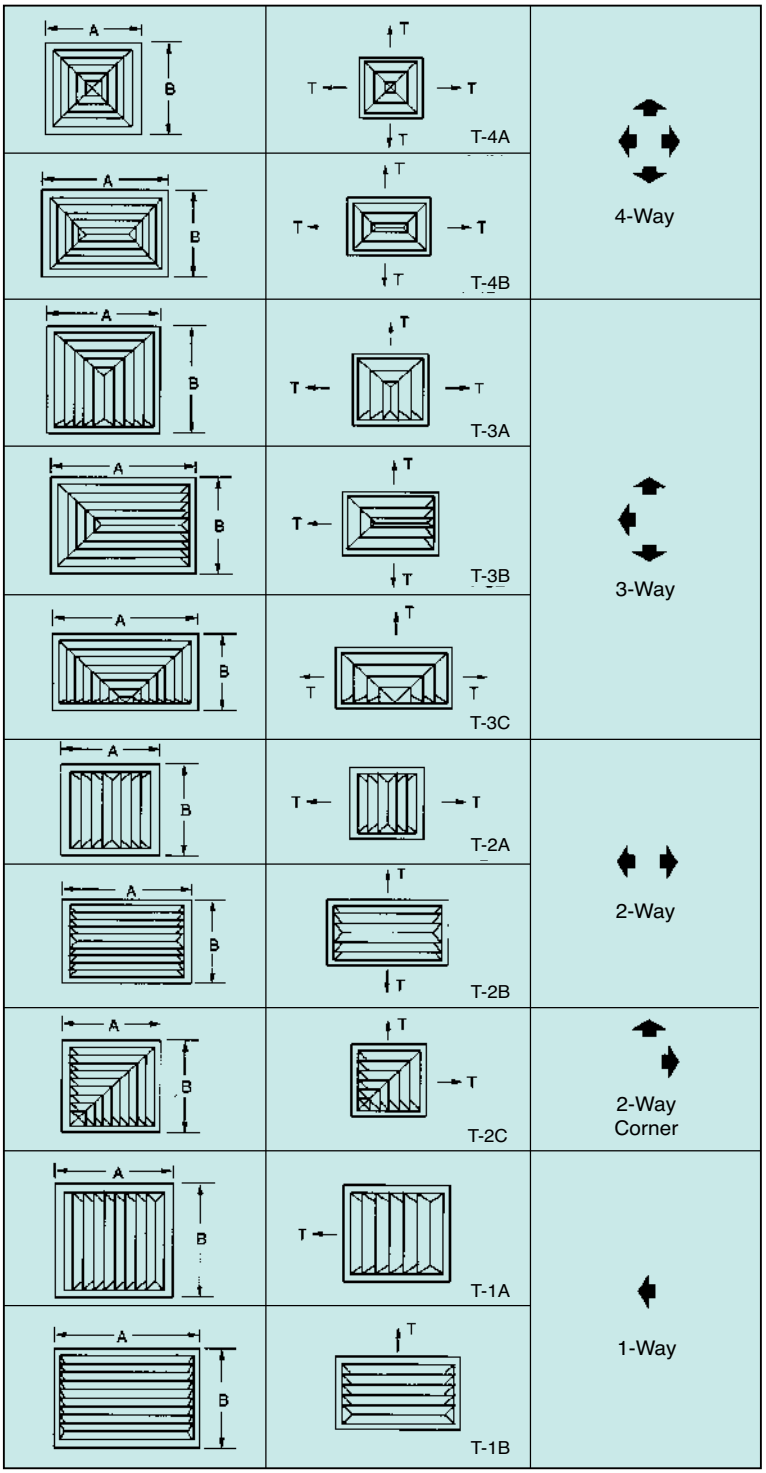

T-4A

T-3A

T-2A

T-1A

Note: Patterns are shown in plan view (looking down into inlet)

KYODO reserves the right to make changes without written notice. The actual product might differ from pictures shown. Drawings are not meant to show exact details of every aspects of the product.

PERFORATED CEILING DIFFUSER

FEATURES

- Model: TCSX - Supply
  PAG - Return
- 1,2,3,4 way discharge pattern.
- Excellent performance in air throw pattern.
- Return models have the same face border construction as the supply models, except the four-ways air pattern deflectors.
- Discharge pattern is easily adjusted by remove the perforated face, then rotating the pattern controllers.
- Perforated face is removable for easy maintenance, adjustment of damper by screw driver.
- Opposed blade Volume Control Damper is incorporated in the ceiling diffuser for square or rectangular duct. Sed III is used in conjunction with round adaptor for round duct.
- Material is galvanized iron with 5mm diameter holes.

FINISH

Standard finish in baked white enamel.
Other colours are available on request.

ACCESSORIES

Air Volume Control Damper:

- Opposed blade volume control damper for square or rectangular neck.
- Radial Type (SED II) for round neck size from Ø150 to Ø350.
- Butterfly Type (B II) for round neck size from Ø400 to Ø500.

MODEL: TCSX

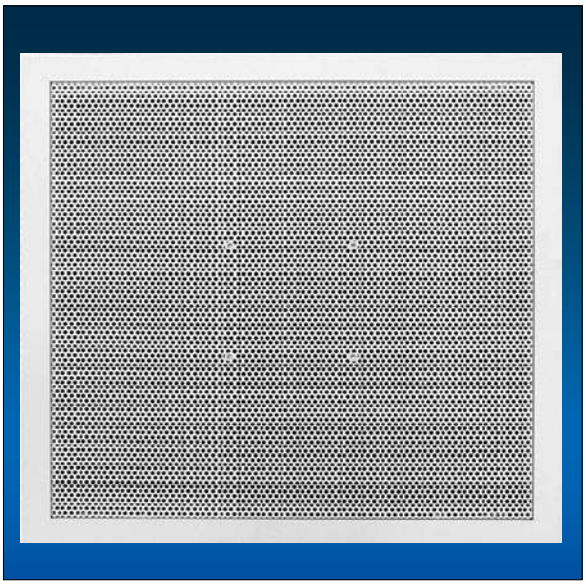

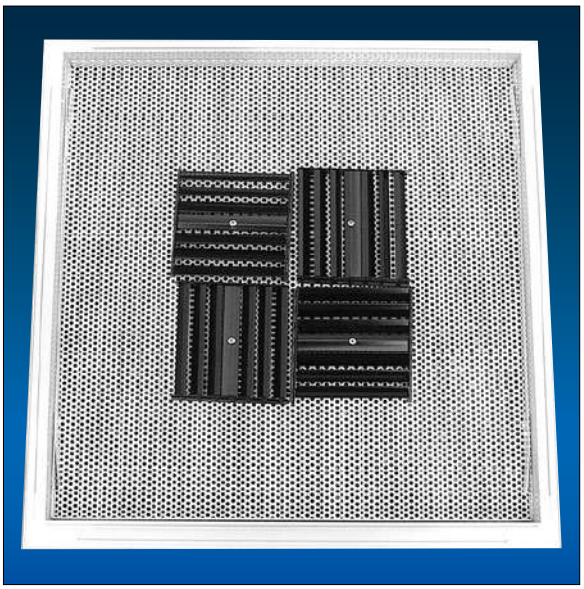

KYODO reserves the right to make changes without written notice. The actual product might differ from pictures shown. Drawings are not meant to show exact details of every aspects of the product.

TECHNICAL PERFORMANCE DATA
MODEL: TCSX

SIZE ø (mm)	CAP ℓ/s	30	40	50	60	70	80	90	100	110	120	130	140	150	200	250	300	350	400	450	500	600	700	800	900	1000	1250	1500	1750
150	S. P.	7.5	13.0	20.5	29.0	39.5	51.0	64.5	79.0	95.0	113.0	132	152.5	174.5															
	NR	8	17	23	28	32	36	40	42	46	50	53	56	58															
	THROW	0.8	1.4	2.0	2.4	2.8	3.2	3.6	4.0	4.2	4.4	4.8	5.0	5.2															
200	S. P.		4.5	6.5	9.5	13.0	16.5	21.0	26.0	31.0	37.0	43.0	50.0	57.0	100.5	155.0	221.5												
	NR		5	11	16	21	24	28	31	33	36	38	40	42	53	62	69												
	THROW		0.2	0.8	1.2	1.6	2.0	2.2	2.6	2.8	3.0	3.2	3.4	3.8	4.6	5.4	6.0												
250	S. P.				4.0	5.5	7.0	8.5	10.5	13.0	15.5	18.0	20.5	23.5	41.5	64.5	92.0	124.5	161.5	203.5									
	NR				7	11	15	18	21	24	26	29	31	33	41	49	56	62	67	72									
	THROW				0.4	0.6	1.0	1.2	1.6	1.8	2.0	2.2	2.4	2.6	3.4	4.2	4.8	5.4	5.8	6.2									
300	S. P.						3.5	4.5	5.5	6.5	7.5	9.0	10.0	11.5	20.5	31.5	45.0	61.0	79.0	99.5	122.5	174.5							
	NR						7	11	14	16	19	21	23	25	33	40	45	51	57	61	65	73							
	THROW						0.2	0.6	0.8	1.0	1.2	1.4	1.6	1.8	2.6	3.2	3.8	4.4	4.8	5.2	5.6	6.4							
350	S. P.								3.0	3.5	4.0	5.0	5.5	6.5	11.0	17.5	24.5	33.5	43.5	54.5	67.0	96.0	130.0	168.5	212.0				
	NR								7	10	13	15	17	19	27	33	38	43	48	52	57	64	70	75	80				
	THROW								0.2	0.4	0.6	0.8	1.0	1.2	1.8	2.6	3.0	3.6	4.0	4.4	4.8	5.4	6.0	6.6	7.0				
400	S. P.											3.0	3.5	4.0	6.5	10.5	14.5	20.0	26.0	32.5	40.0	57.0	77.0	100.5	126.0	155.0	240.0		
	NR											9	11	13	22	28	33	37	41	45	49	56	62	67	72	76	85		
	THROW											0.2	0.4	0.6	1.2	2.0	2.4	2.8	3.4	3.8	4.0	4.8	5.2	5.8	6.2	6.6	7.6		
450	S. P.													2.5	4.0	6.5	9.0	12.5	16.0	20.5	25.0	36.0	48.5	63.0	79.0	97.0	150.5	214.5	
	NR													8	17	23	28	32	36	39	42	49	55	60	65	69	78	85	
	THROW													0.2	0.8	1.4	1.8	2.4	28	3.2	3.4	4.0	4.6	5.2	5.6	6.0	6.8	7.6	
500	S. P.														3.0	4.5	6.0	8.5	10.5	13.5	16.5	24.0	32.0	41.5	52.5	64.5	100.0	142.5	192.5
	NR														12	19	24	28	32	35	38	43	49	54	59	63	72	79	85
	THROW														0.4	1.0	1.4	1.8	2.2	2.6	3.0	3.6	4.0	4.6	5.0	5.4	6.2	7.0	7.6

- Performance data is based on 600x600mm face size
- Result of performance is tested under NATA
- SP – Static Pressure drops are in Pascals
- NR – Noise rating in dB re 10^{-12} watts. Room correction of -6dB
- CAP – Capacity of flow in litre per second
- Throw – Throw at 0.5 m/s Terminal Velocity in metres

KYODO reserves the right to make changes without written notice. The actual product might differ from pictures shown. Drawings are not meant to show exact details of every aspects of the product.

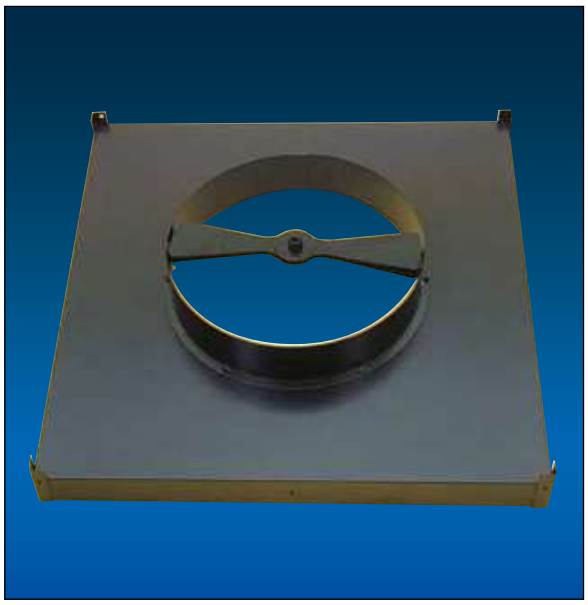

SED II DAMPER (FULLY OPEN)

SED II DAMPER (FULLY CLOSED)

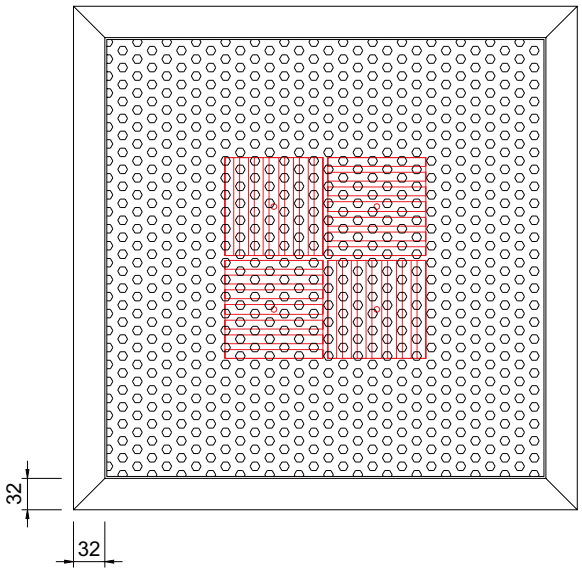

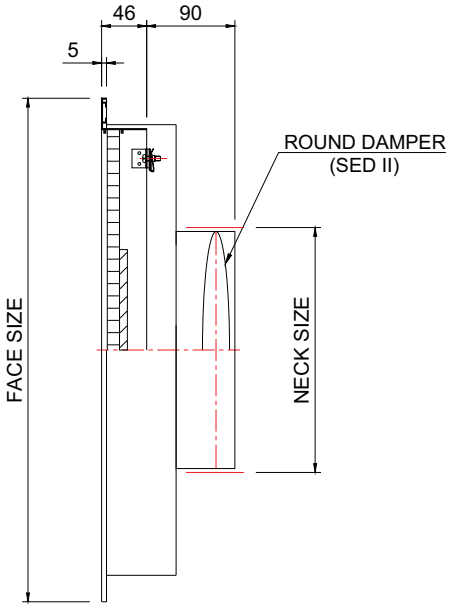

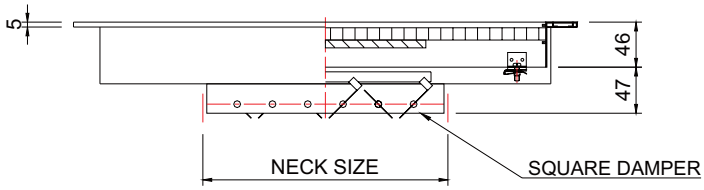

KYODO reserves the right to make changes without written notice. The actual product might differ from pictures shown. Drawings are not meant to show exact details of every aspects of the product.

CEILING DIFFUSER

FEATURES

- KYODO diffuser satisfies architectural as well as engineering criteria. Its strong, clean, unobtrusive lines harmonize with the ceiling system, without sacrificing performance.
- The curvature of the diffuser back panel works with the formed edges of the face panel to deliver a uniform 360° horizontal air pattern, without excessive noise or pressure drop.
- The diffuser is an excellent choice for variable air volume systems. The air pattern remains tight and horizontal for effective room air distribution, even when the volume varies over a wide range.

FINISH

Standard finish in baked white enamel.

Other colours are available on request.

ACCESSORIES

Air Volume Control Damper:

- Radial Type (SED II)

ROUND PLAQUE MODEL: TR

DIMENSIONS

FACE SIZE F (mm)	NECK SIZE N (mm)	D (mm)
595 x 595	Φ 200	60
	Φ 250	60
	Φ 300	60

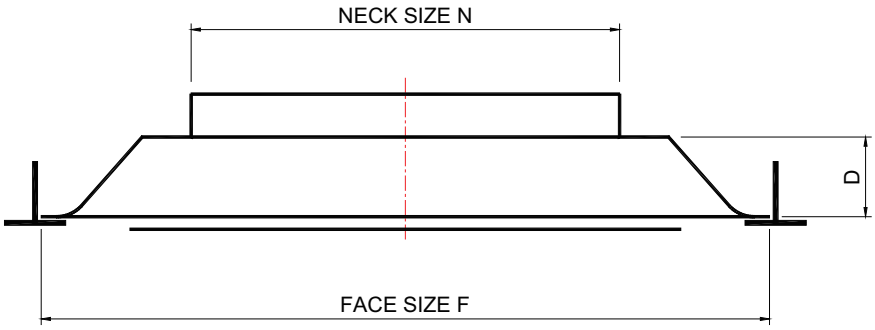

KYODO reserves the right to make changes without written notice. The actual product might differ from pictures shown. Drawings are not meant to show exact details of every aspects of the product.

TECHNICAL PERFORMANCE DATA (With Damper)
MODEL: TR

Neck Velocity (m/s)				2.0	2.5	3.0	3.5	4.0	4.5	5.0	6.0
595 x 595 mm Module Size	Duct Size (mm)	Φ200	Air Volume (CMH)	230	285	340	395	455	510	565	680
			Throw (m)	0.9	1.2	1.4	1.7	1.9	2.1	2.4	2.7
			S.P. (Pa)	8	10	14	18	24	30	34	38
			NC	17	20	24	28	30	32	34	36
		Φ250	Air Volume (CMH)	355	445	530	620	710	795	885	1060
			Throw (m)	1.2	1.6	1.9	2.3	2.7	3.0	3.2	3.5
			S.P. (Pa)	5	7	11	15	20	25	30	36
			NC	16	21	26	30	32	35	37	39
		Φ300	Air Volume (CMH)	510	640	765	890	1020	1145	1275	1530
			Throw (m)	1.6	2.0	2.5	2.9	3.2	3.5	3.8	4.0
			S.P. (Pa)	10	14	21	30	37	42	47	51
			NC	18	23	30	33	36	38	40	42

- Result of performance is tested under NATA, in accordance with ASHRAE STANDARD 70-2006.
- SP - Static Pressure drops are in Pascals.
- NC - Noise Criterion based upon room absorption of 10 dB.
- Throw - Throw at 0.5m/s terminal velocity in metres.

KYODO reserves the right to make changes without written notice. The actual product might differ from pictures shown. Drawings are not meant to show exact details of every aspects of the product.

CEILING DIFFUSER

FEATURES

- KYODO diffuser satisfies architectural as well as engineering criteria. Its strong, clean, unobtrusive lines harmonize with the ceiling system, without sacrificing performance.
- The curvature of the diffuser back panel works with the formed edges of the face panel to deliver a uniform 360° horizontal air pattern, without excessive noise or pressure drop.
- The diffuser is an excellent choice for variable air volume systems. The air pattern remains tight and horizontal for effective room air distribution, even when the volume varies over a wide range.

FINISH

Standard finish in baked white enamel.

Other colours are available on request.

ACCESSORIES

Air Volume Control Damper:

- Radial Type (SED II)

SQUARE PLAQUE MODEL: TS

DIMENSIONS

FACE SIZE F (mm)	NECK SIZE N (mm)	D (mm)
595 x 595	Φ 200	60
	Φ 250	60
	Φ 300	60

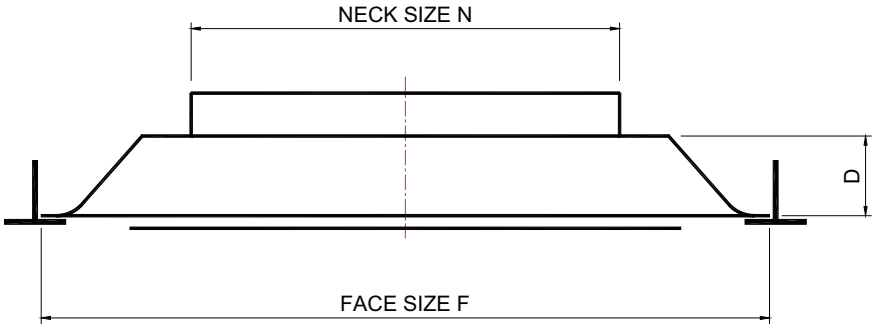

KYODO reserves the right to make changes without written notice. The actual product might differ from pictures shown. Drawings are not meant to show exact details of every aspects of the product.

TECHNICAL PERFORMANCE DATA (With Damper)
MODEL: TS

Neck Velocity (m/s)				2.0	2.5	3.0	3.5	4.0	4.5	5.0	6.0
595 x 595 mm Module Size	Duct Size (mm)	Φ200	Air Volume (CMH)	230	285	340	395	455	510	565	680
			Throw (m)	0.9	1.1	1.3	1.5	1.7	1.9	2.1	2.4
			S.P. (Pa)	6	8	14	17	21	29	37	50
			NC	<10	<10	<10	14	17	21	25	32
		Φ250	Air Volume (CMH)	355	445	530	620	710	795	885	1060
			Throw (m)	1.2	1.5	1.7	1.9	2.3	2.5	2.7	3.0
			S.P. (Pa)	5	7	13	19	27	35	43	59
			NC	<10	<10	10	16	21	23	27	34
		Φ300	Air Volume (CMH)	510	640	765	890	1020	1145	1275	1530
			Throw (m)	1.4	1.9	2.3	2.6	3.0	3.2	3.4	3.8
			S.P. (Pa)	10	15	21	27	36	45	56	79
			NC	<10	<10	15	19	23	26	30	36

- Result of performance is tested under NATA, in accordance with ASHRAE STANDARD 70-2006.
- SP - Static Pressure drops are in Pascals.
- NC - Noise Criterion based upon room absorption of 10 dB.
- Throw - Throw at 0.5m/s terminal velocity in metres.

SWIRL DIFFUSER

FEATURES

- KYODO series SW-2 swirl diffuser is a type of diffuser with fixed radially arranged air control blades.
- It provides high induction vortex air flow projecting horizontally from the face of diffuser.
- This swirling air flow produce a diffuse air distribution, with no stationary air jet resulting excellent uniformity of temperature in air conditioned space.
- Can also be used as a return and exhaust type device.
- Constructed of aluminium or galvanized steel.

FINISH

Standard finish in baked white enamel.

Other colours are available on request.

ACCESSORIES

- Radial blade volume damper (SED II).
- Plenum Box.

MODEL: SW-2

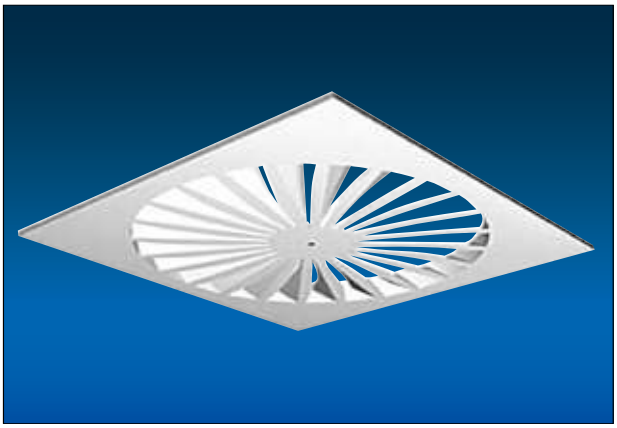

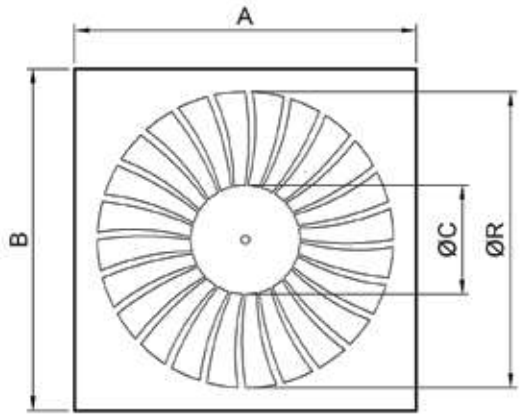

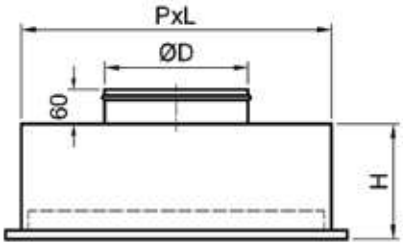

DIMENSIONS

SIZE	A	B	R	C	P	L	H	D
300	595	595	Φ250	Φ90	280	280	200	Φ150
400	595	595	Φ330	Φ130	364	364	200	Φ200
500	595	595	Φ433	Φ150	462	462	200	Φ200
600	595	595	Φ535	Φ180	559	559	200	Φ250
625	595	595	Φ535	Φ180	559	559	200	Φ250

TECHNICAL PERFORMANCE DATA
MODEL: SW-2

SIZE	Neck Velocity (m/s)	2.0	2.5	3.0	3.5	4.0	4.5	5.0	6.0
300	Air Volume CMH	130	160	190	225	255	290	320	385
	Throw (m)	0.6	0.7	0.8	1.0	1.1	1.3	1.4	1.6
	S.P. (Pa)	8	11	17	22	26	34	45	53
	NC	<20	<20	20	26	33	36	40	45
400	Air Volume CMH	230	285	340	395	455	510	565	680
	Throw (m)	0.7	0.9	1.1	1.3	1.4	1.6	1.8	1.9
	S.P. (Pa)	7	11	13	17	24	30	36	50
	NC	<20	20	23	29	33	37	39	44
500	Air Volume CMH	230	285	340	395	455	510	565	680
	Throw (m)	0.6	0.8	0.9	1.0	1.2	1.3	1.4	1.7
	S.P. (Pa)	5	8	10	14	17	21	26	38
	NC	<20	<20	<20	23	25	28	30	35
600/625	Air Volume CMH	355	445	530	620	710	795	885	1060
	Throw (m)	0.7	0.9	1.2	1.4	1.6	1.8	1.9	2.1
	S.P. (Pa)	7	10	15	20	25	31	38	50
	NC	<20	20	24	28	32	37	41	46

- NC - Based on room absorption of 10dB, re 10^{-12} watts.
- SP - Static Pressure drops are in Pascals.
- Throw - Throw at 0.5m/s terminal velocity in metres.

VARIABLE SWIRL DIFFUSER

FEATURES

MODEL: SW-V

- KYODO series SW-V variable swirl diffusers are applicable for spaces with a height of more than 3.8m, such as airport, theatre, stadium, hall, assembly rooms and etc.
- SW-V variable swirl diffuser adopts hydrokinetics principle for the design of its blade, by which the blade pushes the current by means of swirl with a certain initial velocity to achieve a larger throw distance, bigger space covered by a jet, and more efficient convection current effect.
- The blade can be changed its quadrant angle to adapt to different conditions by blowing rotating current of horizontal, slant and vertical directions.
- Constructed of aluminium and steel sheet metal.

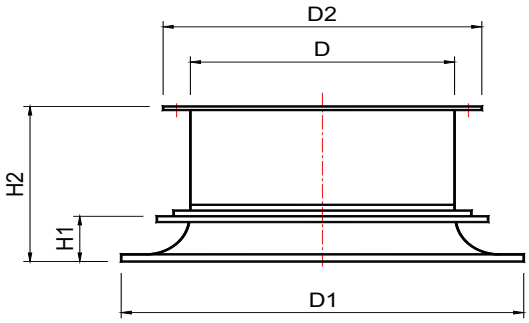

FINISH

Standard finish in baked white enamel.
Other colours are available on request.

Condition A:

The blade could be adjusted to refrigeration mode to adapt to summer conditions. Cold air blows out by means of diffusing swirls to facilitate air convection.

Condition B:

The blade could be adjusted to normal temperature mode to adapt to the fresh wind conditions in spring and autumn to supply fresh wind into the indoors in large scale.

Condition C:

The blade could be adjusted to warming mode to adapt to winter condition. Warm jets are amassed vertical y to be supplied to areas where there are human activities.

DIMENSIONS (mm)

SIZE	D	D1	D2	H1	H2
315	Φ315	Φ465	Φ380	63	205
400	Φ400	Φ575	Φ465	80	240
630	Φ630	Φ870	Φ708	125	385
800	Φ800	Φ1075	Φ870	160	570

KYODO®
KYODO reserves the right to make changes without written notice. The actual product might differ from pictures shown.
Drawings are not meant to show exact details of every aspects of the product.

TECHNICAL PERFORMANCE DATA

MODEL: SW-V

(Condition C):

Φ315	Air Volume CMH	560	840	1120	1400	1680
	Throw (m)	3.0	5.5	7.5	9.0	11.3
	S.P. (Pa)	8	17	30	48	72
	NC	36	46	52	58	62
Φ400	Air Volume CMH	900	1360	1810	2260	2715
	Throw (m)	4.0	5.6	7.8	10.0	13.0
	S.P. (Pa)	8	16	28	45	68
	NC	35	47	52	56	61
Φ630	Air Volume CMH	2245	3365	4490	5610	6730
	Throw (m)	5.0	8.5	11.5	13.5	15.0
	S.P. (Pa)	6	14	24	38	55
	NC	36	48	53	57	62
Φ800	Air Volume CMH	3620	5430	7240	9050	10860
	Throw (m)	11.0	19.0	22.0	24.0	25.0
	S.P. (Pa)	8	18	32	47	70
	NC	35	48	54	58	62

Performance data are tested with blades fully open, which provides maximum vertical throw.

- NC - Based on room absorption of 10dB, re 10^{-12} watts.
- SP - Static Pressure drops are in Pascals.
- Throw -Throw at 0.5m/s terminal velocity in metres.

(Condition A):

Φ315	Air Volume CMH		560	840	1120	1400	1680
	Throw (m)	H	1.2	1.5	1.6	1.8	2.0
		V	0.4	0.9	1.3	2.7	3.3
	S.P. (Pa)		15	33	58	92	130
	NC		38	49	55	60	65
Φ400	Air Volume CMH		900	1360	1810	2260	2715
	Throw (m)	H	1.8	2.8	3.2	3.5	3.6
		V	0.5	0.8	1.0	1.5	3.4
	S.P. (Pa)		15	35	59	92	135
	NC		36	48	53	58	63
Φ630	Air Volume CMH		2245	3365	4490	5610	6730
	Throw (m)	H	2.5	3.0	4.8	6.0	8.0
		V	0.5	0.6	1.2	2.0	5.0
	S.P. (Pa)		16	36	60	100	145
	NC		39	50	56	60	66
Φ800	Air Volume CMH		3620	5430	7240	9050	10860
	Throw (m)	H	5.0	7.4	9.4	13.0	14.5
		V	0.8	1.0	2.1	3.6	4.9
	S.P. (Pa)		15	34	60	93	135
	NC		38	50	57	61	66

- NC - Based on room absorption of 10dB, re 10^{-12} watts.
- SP - Static Pressure drops are in Pascals.
- Throw -Throw at 0.5m/s terminal velocity in metres.

H - Horizontal
V - Vertical

KYODO®
KYODO reserves the right to make changes without written notice. The actual product might differ from pictures shown.
Drawings are not meant to show exact details of every aspects of the product.

LINEAR DIFFUSER

FEATURES

- KYODO series IT-K are designed for both heating and cooling application, supply as well as return.
- Slim profile that goes with modern architectural design.
- Specially designed for sectional or continuous installation.
- Both the direction and volume of the discharge air can be adjusted gradually by moving the pattern controllers.
- Deflector can easily be adjusted without special tool after installation to give many kinds of throw pattern and air volume.
- Diffuser face is easily removable for maintenance if optional air plenum box is used.
- Optional plenum box is available on request for supply and return air purposes for quiet operation and more even distribution of air.
- One piece construction up to 3.0 metre.
- Material is extruded aluminium.

FINISH

Standard finish in baked enamel for diffuser. Black anodizes for deflector.

ORDER KEY

19mm Slot Width	25mm Slot Width
IT – KS – 1 Slot	ITKS – 25 – 1 Slot
IT – KD – 2 Slot	ITKD – 25 – 2 Slot
IT – KT – 3 Slot	ITKT – 25 – 3 Slot
IT – KK – 4 Slot	ITKK – 25 – 4 Slot
IT – K5 – 5 Slot	ITK5 – 25 – 5 Slot
IT – K6 – 6 Slot	ITK6 – 25 – 6 Slot

MODEL: IT-K

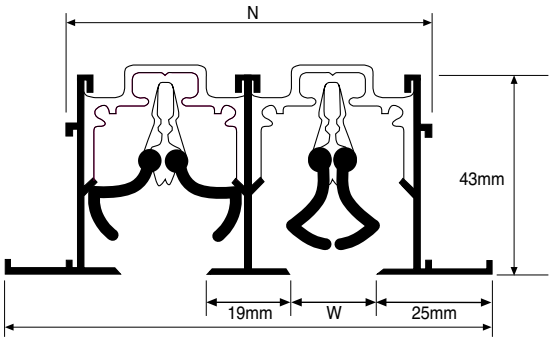

SLOT LINEAR DIFFUSER

DIMENSION

SLOT WIDTH	19mm		25mm	
MODEL	N	F	N	F
IT-KS (1 SLOT)	46	70	52	76
IT-KD (2 SLOT)	84	108	96	120
IT-KT (3 SLOT)	122	146	140	164
IT-KK (4 SLOT)	161	185	185	209
IT-K5 (5 SLOT)	199	223	229	253
IT-K6 (6 SLOT)	238	261	273	297

Dimensions are in mm.

KYODO reserves the right to make changes without written notice. The actual product might differ from pictures shown. Drawings are not meant to show exact details of every aspects of the product.

TECHNICAL PERFORMANCE DATA
MODEL: IT-K

NO OF SLOT	CAP ℓ/s	30	40	50	60	70	80	90	100	120	140	160	180	200	225	250	275	300	325	350	375	400
1	S. P.	13.5	21	30	40	51.5	63.5	76	90	120												
	NR	<10	16	24	30	36	41	46	50	57												
	THROW	4	4.8	5.6	6.2	6.8	7.4	8	8.4	9.4												
2	S. P.	4.5	7	10	13.5	17	21	25.5	30	40	51.5	63.5	76	90	108.5							
	NR	<10	<10	12	15	17	20	24	28	35	41	46	51	55	59							
	THROW	3.2	4	4.6	5	5.6	6	6.6	7	7.8	8.4	9	9.6	10.2	10.8							
3	S. P.			5.5	7	9	11	13.5	16	21	27	33.5	40	47.5	57	67.5	78.5	90				
	NR			<10	12	14	16	18	20	23	29	34	38	42	47	51	54	58				
	THROW			3.8	4.4	4.8	5.2	5.6	6	6.8	7.4	8	8.6	9	9.6	10.2	10.8	11.2				
4	S. P.				4.5	6	7	8.5	10	13.5	17	21	25.5	30	36.5	43	50	57	65	73	81	90
	NR				10	12	14	16	18	21	23	25	29	33	38	42	46	49	52	55	57	60
	THROW				3.8	4.4	4.6	5	5.4	6	6.6	7.2	7.8	8.2	8.8	9.4	9.8	10.4	10.8	11.2	11.6	12
5	S. P.				3	4	5	6	7	9.5	12	15	18	21	25.5	30	35	40	45.5	51.5	57	63.5
	NR				<10	11	13	15	16	19	21	23	25	27	31	35	39	42	45	48	50	53
	THROW				3.4	3.8	4.2	4.6	5	5.6	6.2	6.6	7.2	7.6	8.2	8.6	9.2	9.6	10	10.4	10.8	11.2
6	S. P.					3	4	4.5	5.5	7	9	11	13.5	16	19	22.5	26.5	30	34	38.5	43	47.5
	NR					<10	11	13	15	18	20	22	24	26	27	29	33	36	39	42	45	47
	THROW					3.6	3.8	4.2	4.6	5.2	5.6	6.2	6.6	7.2	7.6	8.2	8.6	9	9.4	9.8	10.2	10.6

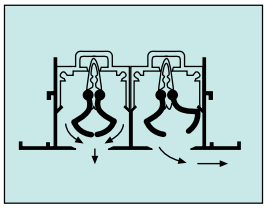

VERTICAL & HORIZONTAL

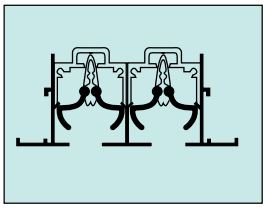

FULLY DAMPERED

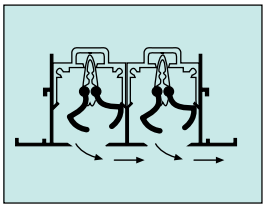

ONE WAY

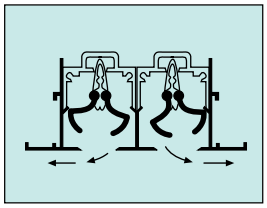

OPPOSED UNEQUAL FLOW
(ONE SLOT DAMPERED)

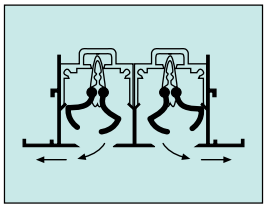

OPPOSED

MODEL: ITK-25

NO OF SLOT	CAP ℓ/s	30	40	50	60	70	80	90	100	120	140	160	180	200	225	250	275	300	325	350	375	400
1	S. P.	9	14.5	21.5	29.5	38.5	48.5	59.5	71.5	98.5	128.5	162										
	NR	-	13	18	23	27	30	33	36	43	49	54										
	THROW	0.6	1.4	2.2	2.8	3.6	4.2	4.8	5.4	6.2	7	7.6										
2	S. P.		4.5	6.5	9	11.5	14.5	18	21.5	29.5	38.5	48.5	59.5	71.5	88							
	NR		-	-	11	14	17	20	22	27	31	34	38	42	46							
	THROW		0.4	0.8	1.2	1.6	2	2.4	2.8	3.6	4.2	4.8	5.2	5.8	6.2							
3	S. P.			3	4.5	5.5	7	9	10.5	14.5	19	24	29.5	35.5	43.5	52	61.5	71.5	82.5	93.5	105.5	118
	NR			-	-	-	11	14	16	20	23	26	29	32	35	38	42	45	48	51	53	56
	THROW			0.4	0.6	1	1.2	1.6	1.8	2.4	3	3.6	4	4.4	4.8	5.2	5.6	5.8	6	6.4	6.4	6.6
4	S. P.				2.5	3.5	4.5	5.5	6.5	9	11.5	14.5	18	21.5	26.5	31.5	37.5	43.5	50	57	64	71.5
	NR				-	-	-	-	12	16	19	22	25	27	29	32	34	37	40	42	45	47
	THROW				0.6	0.6	0.8	1.2	1.4	1.8	2.4	2.8	3.2	3.6	4	4.4	4.6	5	5.2	5.4	5.6	5.8
5	S. P.					2.5	3	3.5	4.5	6	8	10	12	14.5	18	21.5	25.5	29.5	34	38.5	43.5	48.5
	NR					-	-	-	-	13	16	19	21	24	26	29	31	33	34	36	39	41
	THROW					0.6	0.8	1	1	1.4	1.8	2.2	2.6	3	3.4	3.8	4	4.4	4.6	4.8	5.2	5.4
6	S. P.							2.5	3	4.5	5.5	6.5	7	10.5	13	15.5	18.5	21.5	24.5	28	31.5	35.5
	NR							-	-	-	13	15	16	21	24	26	28	30	32	34	35	37
	THROW							0.8	1	1.2	1.6	1.8	2	2.6	3	3.4	3.6	4	4.2	4.4	4.6	4.8

- Performance data is based on 1.2m active length
- Result of performance is tested under NATA, in accordance with ADC 10621 GRD-84
- SP – Static Pressure drops are in Pascals
- NR – Noise rating in dB re 10^{-12} watts. Room correction of -10dB
- CAP – Capacity of flow in litre per second
- Throw – Throw at 0.5 m/s Terminal Velocity in metres

KYODO reserves the right to make changes without written notice. The actual product might differ from pictures shown. Drawings are not meant to show exact details of every aspects of the product.

END FABRICATION

A) OPEN END

B) C/W END CAP

ALIGNMENT STRIPS

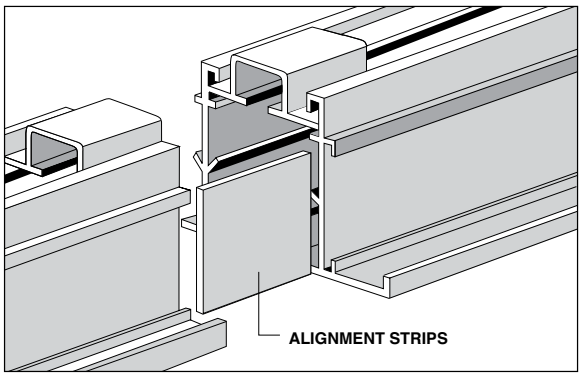

CORNER FABRICATION

INSTALLATION DETAILS:

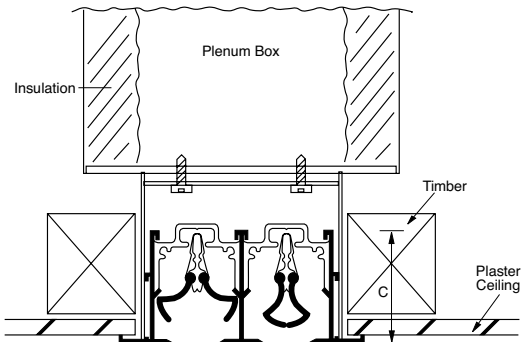

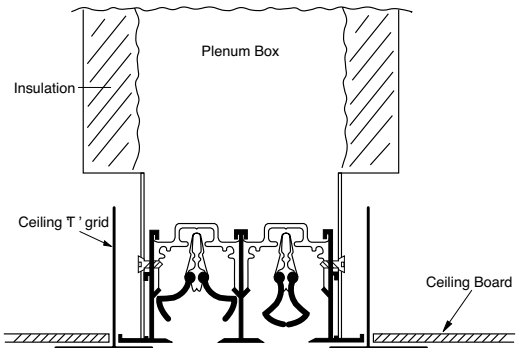

A) CONCEALED MOUNTING

B) LAY-IN TYPE

KYODO reserves the right to make changes without written notice. The actual product might differ from pictures shown. Drawings are not meant to show exact details of every aspects of the product.

SLOT DIFFUSER MOUNTED ON AIR PLENUM BOX: IT-K / ITK-25

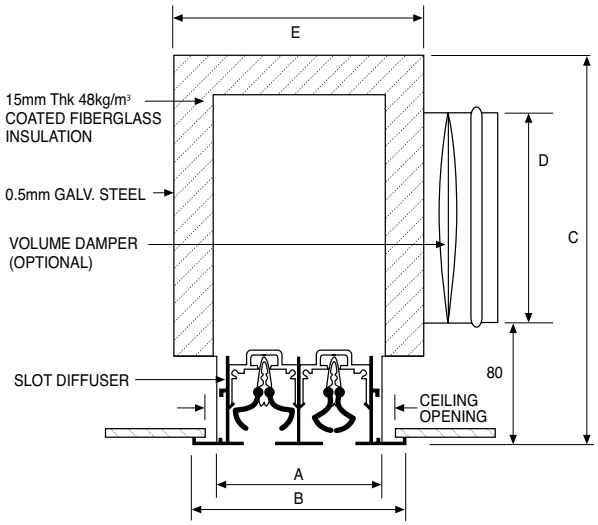

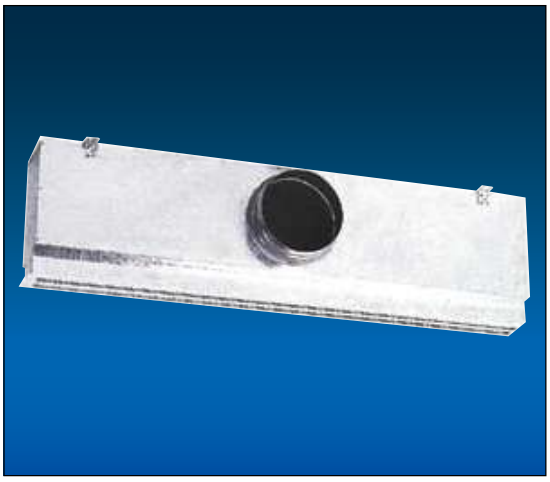

STANDARD CONSTRUCTION FOR IT-K

Slot	A	B	C	D	E	Ceiling Opening	Inlet Dia
1	46	70	245	150	92	56	150
2	84	108	295	200	130	94	200
3	122	146	345	250	168	132	250
4	161	185	395	300	207	171	300
5	199	223	395	300	245	209	300
6	238	261	395	300	284	248	300

SPECIAL CONSTRUCTION (OVAL INLET) FOR IT-K

Slot	A	B	C	D	E	Ceiling Opening	Inlet Dia
1	46	70	245	150	92	56	150 (Oval)
2	84	108	245	150	130	94	200 (Oval)
3	122	146	295	200	168	132	250 (Oval)
4	161	185	295	200	207	171	300 (Oval)
5	199	223	295	200	245	209	300 (Oval)
6	238	261	295	200	284	248	300 (Oval)

STANDARD CONSTRUCTION FOR ITK-25

Slot	A	B	C	D	E	Ceiling Opening	Inlet Dia
1	52	76	295	200	98	62	200
2	96	120	345	250	142	106	250
3	140	164	345	250	186	150	250
4	185	209	395	300	231	195	300
5	229	253	395	300	275	239	300
6	273	297	445	350	319	283	350

SPECIAL CONSTRUCTION (OVAL INLET) FOR ITK-25

Slot	A	B	C	D	E	Ceiling Opening	Inlet Dia
1	52	76	245	150	98	62	200 (Oval)
2	96	120	295	200	142	106	250 (Oval)
3	140	164	295	200	186	150	250 (Oval)
4	185	209	295	200	231	195	300 (Oval)
5	229	253	295	200	275	239	300 (Oval)
6	273	297	295	200	319	283	350 (Oval)

KYODO reserves the right to make changes without written notice. The actual product might differ from pictures shown. Drawings are not meant to show exact details of every aspects of the product.

FLUORESCENT LIGHT TROFFER DIFFUSERS

SUPPLY SINGLE SIDE OR DOUBLE (SADDLE)

These diffusers attach quickly and easily to standard air handling fluorescent light troffers. Lighting and air distribution are provided through a single ceiling penetration. The air opening is an inconspicuous slot at the edge of the light troffer.

Each order is carefully checked to make sure the diffuser will fit the light troffers.

FEATURES

- For regressed slot troffers.
- Diffusers are available in both saddle (double side) and single side types.
- Choice of top inlet or side inlet, in various duct sizes.
- Choice of internally or externally insulated, or uninsulated construction.
- Material is EG steel.

STANDARD FINISH

Mild EG Steel finish as standard

MODEL: SALT

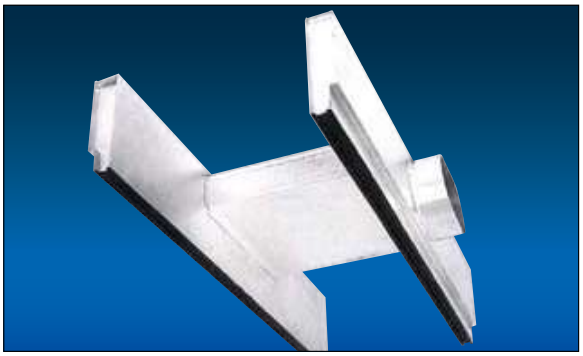

24 SALT (Saddle)

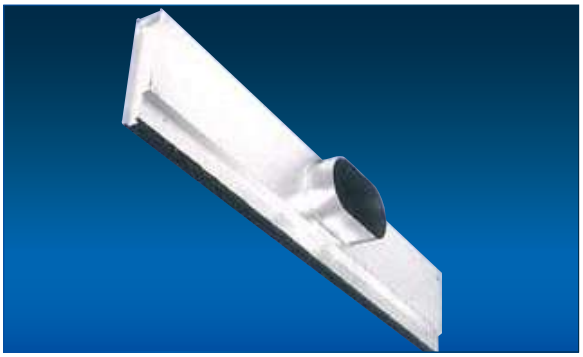

14 SALT (Single Side)

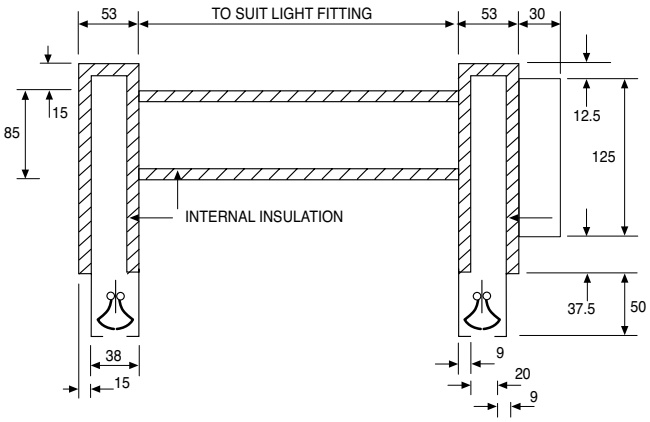

AIR LIGHT TROFFER MODEL: 24 SALT

KYODO reserves the right to make changes without written notice. The actual product might differ from pictures shown. Drawings are not meant to show exact details of every aspects of the product.

TECHNICAL PERFORMANCE DATA
MODEL: SALT

14 SALT . SINGLE SIDE . FOR LIGHT TROFFER 1200 MM LONG

	AIR FLOW (ℓ/s)	40	50	60	70	80
HORIZONTAL DISCHARGE	SP	32	53	70	92	115
	NR	21	28	32	37	40
	THROW (M)	3.3	4.0	>4.7	>4.7	>4.7

24 SALT . DOUBLE SIDE (SADDLE) . FOR LIGHT TROFFER 1200 MM LONG

	AIR FLOW (ℓ/s)	60	70	80	100	120	140	160
HORIZONTAL DISCHARGE	SP	10	13.5	16.5	26	35	47.5	64.5
	NR	—	<13	21	27	32	35	38
	THROW (M)	1.0	1.5	1.9	2.5	3.0	3.5	4.2

- Result of performance is tested under NATA
- Test set-up was in general accordance with ADC equipment test code 1062: GRD-84
- SP – Static Pressure drops are in Pascals
- NR – Noise rating in dB re 10^{-12} watts. Room correction of -10dB
- CAP – Capacity of flow in litre per second
- Throw – Throw at 0.5m/s Terminal Velocity in metres

KYODO reserves the right to make changes without written notice. The actual product might differ from pictures shown. Drawings are not meant to show exact details of every aspects of the product.

LAMINAR FLOW CLEAN ROOM / ZONE DIFFUSER

MODEL: LFD-S
LFD-R

Kyodo LFD type laminar flow clean room / zone diffuser is the ideal choice for unidirectional flow application. If the supply air were already purified by ULPA/HEPA filter, this diffuser would be most suitable to create a Clean Room environment.

It is suitable for operating rooms, laboratories and other clean rooms where the air must be carefully controlled.

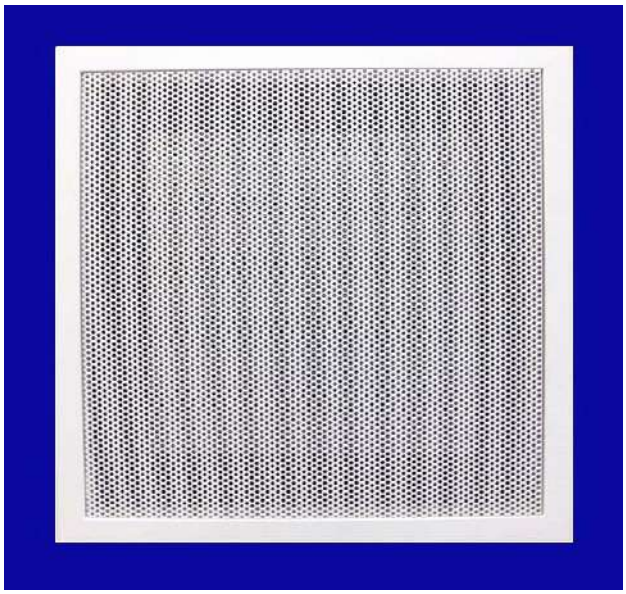

FEATURES:

- Removable perforated face for cleaning.
- For connection to square or rectangular duct, opposed blade volume control damper is available. Only a screw-driver is needed for damper adjustment. (Model: LFD-S)
- For connection to round duct, round disk type damper is available. Only a screw-driver is needed for damper adjustment. (Model: LFD-R)
- Internal baffles distribute air evenly over perforated face.
- Designed for both lay-in t-bar ceiling systems & surface mount applications.
- Perforated face material is galvanized iron with 5mm diameter holes.

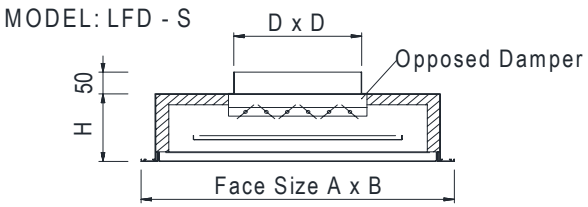

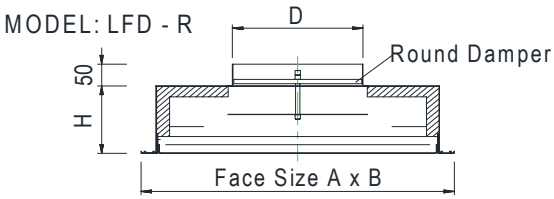

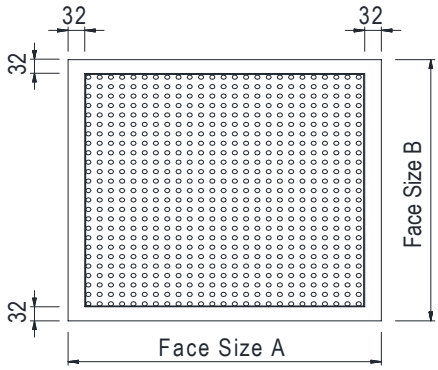

FINISH:

Standard finish in baked white enamel.
Other standard colours are available on request.

Size	No.2206	No.2306	No.2406	No.2208	No.2308	No.2408	No.2210	No.2310	No.2410	No.2212	No.2312	No.2412
A	600	600	600	600	600	600	600	600	600	600	600	600
B	600	900	1200	600	900	1200	600	900	1200	600	900	1200
H	150	150	150	150	150	150	150	150	150	150	150	150
D	150	150	150	200	200	200	250	250	250	300	300	300

KYODO®
KYODO reserves the right to make changes without written notice. The actual product might differ from pictures shown. Drawings are not meant to show exact details of every aspects of the product.

TECHNICAL PERFORMANCE DATA
MODEL: LFD-S

SIZE	CAP (l/s)	40	50	60	70	80	90	100	110	120	130	140	150	175	200	225	250
No. 2206	Throw (m)	0.4	0.7	1.1	1.5	1.6	1.7	1.8	2.0	2.3							
	S.P. (Pa)	12	18	28	34	42	48	60	72	86							
	NC	14	18	22	27	31	33	36	39	42							
No. 2306	Throw (m)		0.6	0.9	1.0	1.3	1.4	1.7	1.9	2.1							
	S.P. (Pa)		13	19	25	31	43	52	60	78							
	NC		16	21	25	28	31	34	37	41							
No. 2406	Throw (m)		0.6	0.8	1.0	1.2	1.3	1.6	1.8	2.0							
	S.P. (Pa)		12	18	22	28	38	46	56	70							
	NC		15	20	22	28	30	33	37	40							
No. 2208	Throw (m)		0.5	0.8	1.0	1.2	1.5	1.7	1.9	2.1	2.2	2.5					
	S.P. (Pa)		8	11	15	20	25	34	41	50	58	66					
	NC		13	17	19	22	25	27	30	32	34	36					
No. 2308	Throw (m)			0.6	0.8	1.1	1.4	1.6	1.8	1.9	2.2	2.4					
	S.P. (Pa)			10	13	17	22	29	36	43	50	57					
	NC			15	18	21	24	27	29	31	33	36					
No. 2408	Throw (m)			0.5	0.7	0.9	1.2	1.4	1.6	1.8	2.0	2.1					
	S.P. (Pa)			9	12	16	20	26	33	39	45	52					
	NC			13	17	19	23	25	28	30	32	35					
No. 2210	Throw (m)				0.8	1.0	1.2	1.4	1.6	1.8	1.9	2.1	2.2	2.4	2.5		
	S.P. (Pa)				6	8	12	16	18	22	25	28	32	47	58		
	NC				13	15	18	19	23	25	29	30	32	36	40		
No. 2310	Throw (m)					0.8	1.1	1.2	1.4	1.5	1.6	1.8	2.0	2.2	2.3		
	S.P. (Pa)					7	10	13	15	18	21	24	27	41	50		
	NC					15	17	20	22	24	27	29	31	35	40		
No. 2410	Throw (m)					0.8	1.0	1.1	1.2	1.3	1.4	1.6	1.8	2.0	2.2		
	S.P. (Pa)					6	9	11	13	15	18	21	24	36	43		
	NC					14	15	18	22	24	27	28	31	35	39		
No. 2212	Throw (m)						0.8	1.0	1.2	1.5	1.7	1.9	2.1	2.4	2.6	2.7	2.9
	S.P. (Pa)						6	8	10	13	16	19	24	34	42	48	62
	NC						12	15	16	19	20	22	23	29	33	36	43
No. 2312	Throw (m)							0.8	1.2	1.4	1.5	1.6	2.0	2.3	2.5	2.6	2.7
	S.P. (Pa)							6	8	12	14	17	21	32	38	40	55
	NC							13	165	18	20	21	22	27	31	36	41
No. 2412	Throw (m)								1.0	1.2	1.3	1.5	1.8	2.0	2.1	2.3	2.6
	S.P. (Pa)								7	10	12	15	18	25	33	42	47
	NC								14	17	20	21	22	27	30	36	40

- Performance data is based on tests conducted according to ANSI/ASHRAE Standard 70-2006.
- All data based on full open damper position.
- SP -Static Pressure drops are in Pascals.
- NC -Noise Criteria in dB re 10^{-12} watts, based on a room absorption of 10 dB re 10^{-12} watts.
- CAP -Capacity of flow in litre per second.
- Throw -Throw at 0.25m/s terminal velocity in metres.

KYODO®

KYODO reserves the right to make changes without written notice. The actual product might differ from pictures shown. Drawings are not meant to show exact details of every aspects of the product.

TECHNICAL PERFORMANCE DATA
MODEL: LFD-R

SIZE	CAP (l/s)	40	50	60	70	80	90	100	110	120	130	140	150	175	200	225	250
No. 2206	Throw (m)	0.4	0.8	1.2	1.5	1.7	1.8	1.9	2.1	2.4							
	S.P. (Pa)	11	16	26	33	42	46	58	71	84							
	NC	14	18	22	27	32	34	37	40	43							
No. 2306	Throw (m)		0.7	0.9	1.1	1.3	1.4	1.7	2.0	2.2							
	S.P. (Pa)		12	18	24	29	42	50	58	75							
	NC		17	21	25	29	32	35	38	42							
No. 2406	Throw (m)		0.6	0.8	1.0	1.2	1.3	1.6	1.8	2.0							
	S.P. (Pa)		11	16	20	27	37	43	54	68							
	NC		16	20	24	28	30	34	37	40							
No. 2208	Throw (m)		0.5	0.8	1.0	1.2	1.5	1.7	1.9	2.1	2.3	2.6					
	S.P. (Pa)		7	10	14	18	22	32	40	48	56	63					
	NC		14	17	19	22	25	28	30	33	35	37					
No. 2308	Throw (m)			0.6	0.9	1.1	1.4	1.6	1.8	1.9	2.2	2.4					
	S.P. (Pa)			9	12	14	20	27	34	41	47	54					
	NC			15	18	21	24	27	29	31	33	36					
No. 2408	Throw (m)			0.5	0.7	0.9	1.2	1.4	1.6	1.8	2.0	2.1					
	S.P. (Pa)			8	11	14	18	24	31	37	43	50					
	NC			14	17	20	23	26	29	31	33	36					
No. 2210	Throw (m)				0.9	1.0	1.2	1.4	1.6	1.8	1.9	2.1	2.2	2.4	2.6		
	S.P. (Pa)				6	8	11	15	17	20	23	25	32	45	55		
	NC				14	16	18	20	23	26	29	31	33	37	42		
No. 2310	Throw (m)					0.9	1.1	1.2	1.4	1.5	1.6	1.8	2.0	2.2	2.4		
	S.P. (Pa)					7	9	12	14	16	20	22	25	40	48		
	NC					15	17	20	22	25	28	30	32	36	41		
No. 2410	Throw (m)					0.8	1.0	1.1	1.2	1.3	1.4	1.6	1.8	2.0	2.3		
	S.P. (Pa)					5	9	11	13	14	17	20	23	34	40		
	NC					14	15	19	22	25	27	29	31	36	40		
No. 2212	Throw (m)						0.8	1.1	1.3	1.5	1.8	2.0	2.2	2.5	2.7	2.9	3.0
	S.P. (Pa)						5	7	10	12	15	17	22	32	39	46	60
	NC						13	15	17	19	21	22	24	30	34	38	44
No. 2312	Throw (m)							0.9	1.2	1.4	1.5	1.7	2.0	2.3	2.5	2.7	2.8
	S.P. (Pa)							5	8	11	13	15	19	30	36	38	52
	NC							14	16	19	21	22	23	29	33	38	43
No. 2412	Throw (m)								1.0	1.2	1.3	1.5	1.8	2.0	2.1	2.3	2.7
	S.P. (Pa)								5	8	10	13	15	22	31	40	45
	NC								15	18	20	21	24	28	33	37	42

- Performance data is based on tests conducted according to ANSI/ASHRAE Standard 70-2006.
- All data based on full open damper position.
- SP -Static Pressure drops are in Pascals.
- NC -Noise Criteria in dB re 10^{-12} watts, based on a room absorption of 10 dB re 10^{-12} watts.
- CAP -Capacity of flow in litre per second.
- Throw -Throw at 0.25m/s terminal velocity in metres.

KYODO®

KYODO reserves the right to make changes without written notice. The actual product might differ from pictures shown. Drawings are not meant to show exact details of every aspects of the product.

EINDEC SINGAPORE PTE LTD
100H Pasir Panjang Road, OC@Pasir Panjang #01-01, Singapore 118524
Tel: (65) 6265 1311 Email: enquiry@eindec.com.sg
Fax: (65) 6265 8100 Website: www.eindec.com.sg

EINDEC SHENZHEN ENVIRONMENTAL TECHNOLOGY CO LTD
13th Floor, Buildng 2 of Shenzhen Radio & Television Cultural Industry Park,
Qingqing Road, Longhua District, Shenzhen
Tel: (86) 755-2807 6868 Website: www.eindec.com

EINDEC TECHNOLOGY (MALAYSIA) SDN BHD
Office
No. 81A, Jalan BP 7/2, Bandar Bukit Puchong 2, 47100 Puchong,
Selangor, Malaysia
Tel: (603) 8052 5718 Website: www.eindec.com.sg

Factory
Lot 854, Jalan Sengkang, 81000 Kulai, Johor, Malaysia
Tel: (607) 6637 467/68/69
Fax: (607) 6622 285